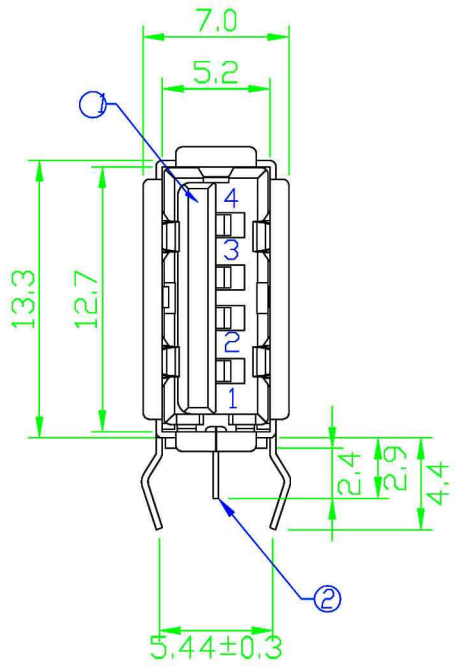

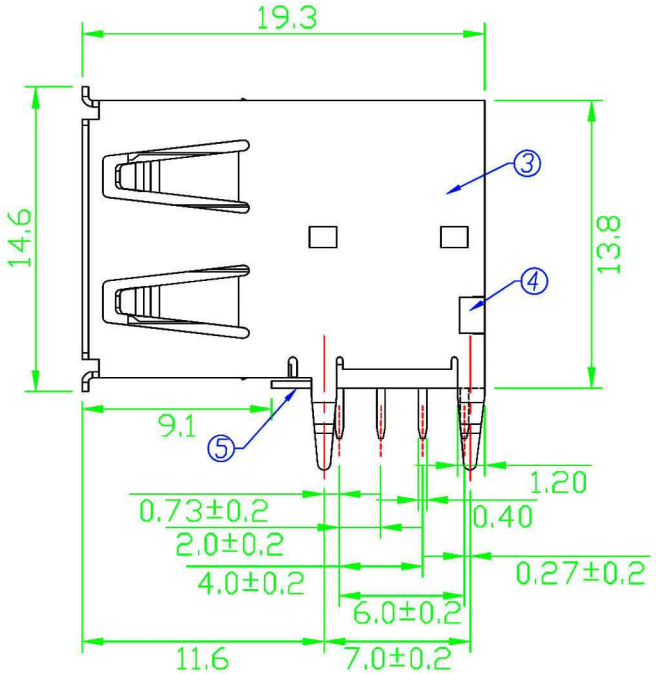

Specification:
Contact Resistance: 30m Ohm Max.
Insulation Resistance: 1000M Ohm Min. At 500VDC.
Rated Voltage And Current: 1.5A At 250VAC Minimum.
Dielectric Withstanding Voltage: 750V AC (rms) for 1 Minute(Rev. 1.1)
Durability (Life Test): 1500 Cycles
Insertion Force: 35 Newtone Maximum.
Extraction Force: 10 Newtone Minimum.

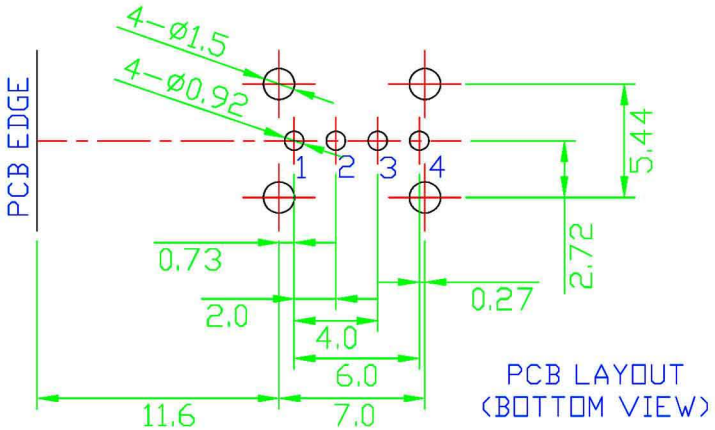

NO.	NAME	MATERIAL	FINISH	Q'TY	REMARK
1	HOUSING	PBT G.F.	BLACK	1	
2	TERMINAL	PHOS. BRONZE T:0.25	GOLD/TIN PLATED	4	Gold:1~3u"; NI:40~60u" ; TIN:120u" (100% pure Tin of lead free plating)
3	SHELL	BRASS T:0.3	NICKEL PLATED	1	
4	REAR SHELL	SPCC T:0.3	NICKEL PLATED	1	
5	BOTTOM COVER	PBT G.F.	BLACK	1	

RoHS Compliant

T&T Connection System Co., Ltd.

APPD. 核 准		TOLERANCE 容許公差 X. ±0.38 .X ±0.25 .XX ±0.13 .XXX ±0.05	PART NAME 品 名: SINGLE USB-A 4P FEMALE VERTICAL 90° THROUGH HOLE
DWG. 製 圖: Hedy	SCALE 比 例: 參 考		
	UNIT 單 位: MM	SIZE. 紙張尺寸: A4	
DATE 制表日: 2012/06/25	PAGE 張 數: 1 / 1	REV. 版 次: A	PART NO. 料 號: USB-A-S04PFVT