MTA®
Advanced Automotive Solutions

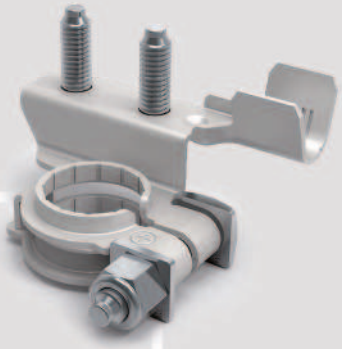

PRODUCT CATALOGUE

2018

INDEX

FUSES 3

POWER DISTRIBUTION UNITS 25

MAIN DISTRIBUTION UNITS 38

FUSE/RELAY HOLDERS 61

ADAPTERS & FIXING PLATES 82

CONNECTORS 87

BATTERY TERMINALS 118

TERMINALS 128

INSULATED TERMINALS 168

CRIMPING TOOLS 179

CAPS 183

RADIATOR/OIL/GASOLINE CAPS 188

SENSORS 193

CABLES 197

CABLES FIXING 203

SWITCHES 206

SUNDRIES 209

FUSES

MINIVAL®

AMP	DESCRIPTION	COLOUR		P/N BLISTER	M.O.Q.	P/N BOX	M.O.Q.	P/N BULK	M.O.Q.
2A	MINIVAL	Grey		0600090	500	0700090	200	0705090	5000
3A	MINIVAL	Violet		0600100	500	0700100	200	0705100	5000
4A	MINIVAL	Pink		0600101	500	0700101	200	0705101	5000
5A	MINIVAL	Beige		0600110	500	0700110	200	0705110	5000
7,5A	MINIVAL	Brown		0600120	500	0700120	200	0705120	5000
10A	MINIVAL	Red		0600130	500	0700130	200	0705130	5000
15A	MINIVAL	Blue		0600140	500	0700140	200	0705140	5000
20A	MINIVAL	Yellow		0600150	500	0700150	200	0705150	5000
25A	MINIVAL	Natural		0600160	500	0700160	200	0705160	5000
30A	MINIVAL	Green		0600170	500	0700170	200	0705170	5000

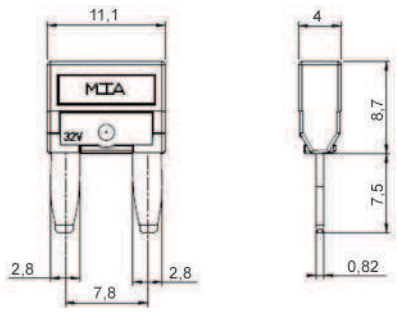

UNIVAL®

AMP	DESCRIPTION	COLOUR		P/N BLISTER	M.O.Q.	P/N BOX	M.O.Q.	P/N BULK	M.O.Q.	P/N BULK	M.O.Q.
1A	UNIVAL	Black				0600380	100	0700380	2000		
2A	UNIVAL	Grey				0600390	100	0700390	2000		
3A	UNIVAL	Violet				0600400	1000	0700300	2000	0710300	6000
4A	UNIVAL	Pink				0600401	1000	0700301	2000		
5A	UNIVAL	Beige		0600492	200	0600410	1000	0700310	2000	0710310	6000
7,5A	UNIVAL	Brown		0600493	200	0600420	1000	0700320	2000	0710320	6000
10A	UNIVAL	Red		0600494	200	0600430	1000	0700330	2000	0710330	6000
15A	UNIVAL	Blue		0600495	200	0600440	1000	0700340	2000	0710340	6000
20A	UNIVAL	Yellow		0600496	200	0600450	1000	0700350	2000	0710350	6000
25A	UNIVAL	Natural		0600497	200	0600460	1000	0700360	2000	0710360	6000
30A	UNIVAL	Green		0600498	200	0600470	1000	0700370	2000	0710370	6000
40A	UNIVAL	Orange				0600375	1000	0700375	2000	0710375	6000

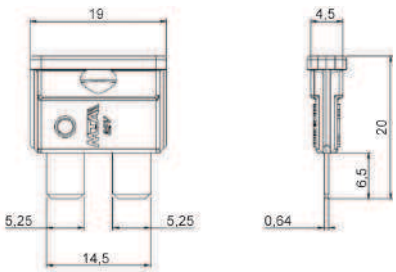

MAXICOMPACT®

AMP	DESCRIPTION	COLOUR		P/N BOX	M.O.Q.	P/N BULK	M.O.Q.
25A	MAXICOMPACT	White		0602925	100	0702925	2000
30A	MAXICOMPACT	Light Green		0602930	100	0702930	2000
35A	MAXICOMPACT	Dark Green		0602935	100	0702935	2000
40A	MAXICOMPACT	Orange		0602940	100	0702940	2000
50A	MAXICOMPACT	Red		0602950	100	0702950	2000
60A	MAXICOMPACT	Blue		0602960	100	0702960	2000

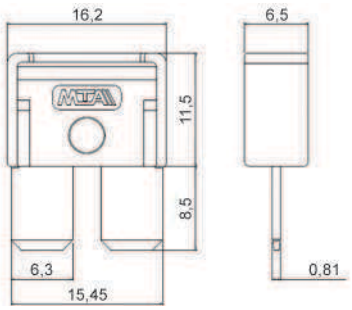

M8COMPACT®

AMP	DESCRIPTION	COLOUR		P/N BOX	M.O.Q.	P/N BULK	M.O.Q.
30A	M8COMPACT	Light Green		0610030	150	0710030	1000
35A	M8COMPACT	Green		0610035	150	0710035	1000
40A	M8COMPACT	Orange		0610040	150	0710040	1000
50A	M8COMPACT	Red		0610050	150	0710050	1000
60A	M8COMPACT	Blue		0610060	150	0710060	1000
70A	M8COMPACT	Brown		0610070	150	0710070	1000
80A	M8COMPACT	Black		0610080	150	0710080	1000

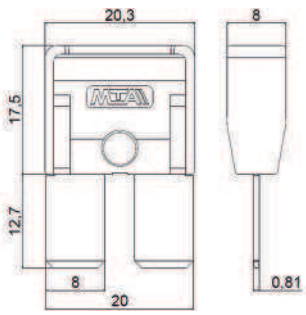

MAXIVAL®

AMP	DESCRIPTION	COLOUR		P/N BOX	M.O.Q.	P/N BULK	M.O.Q.
20A	MAXIVAL	Yellow		0600900	100	0700900	1000
30A	MAXIVAL	Green		0600910	100	0700910	1000
40A	MAXIVAL	Orange		0600920	100	0700920	1000
50A	MAXIVAL	Red		0600930	100	0700930	1000
60A	MAXIVAL	Blue		0600940	100	0700940	1000
70A	MAXIVAL	Beige		0600950	100	0700950	1000
80A	MAXIVAL	Natural		0600960	100	0700960	1000
100A	MAXIVAL	Violet		0600970	100	0700970	1000

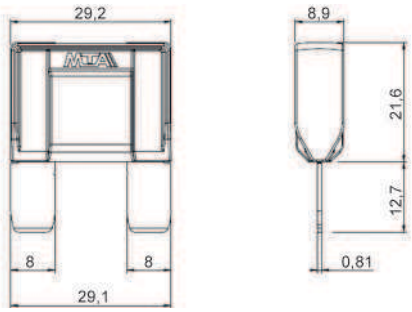

MIDIVAL®

AMP	DESCRIPTION	COLOUR		P/N BLISTER	M.O.Q.	P/N BULK	M.O.Q.
30A	MIDIVAL	Orange		0602030	20	0702030	1000
40A	MIDIVAL	Green		0602040	20	0702040	1000
50A	MIDIVAL	Red		0602050	20	0702050	1000
60A	MIDIVAL	Yellow		0602060	20	0702060	1000
70A	MIDIVAL	Brown		0602070	20	0702070	1000
80A	MIDIVAL	White		0602080	20	0702080	1000
100A	MIDIVAL	Blue		0602100	20	0702100	1000
125A	MIDIVAL	Pink		0602125	20	0702125	1000

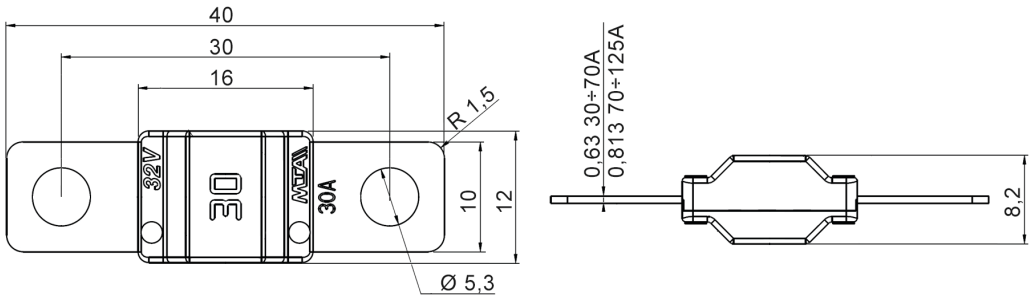

MIDIVAL® CU

NEW

AMP	DESCRIPTION	COLOUR.		P/N BOX	M.O.Q.	P/N BULK	M.O.Q.
30A	Cu MIDIVAL	Orange		0608030	20	0708030	1500
40A	Cu MIDIVAL	Green		0608040	20	0708040	1500
50A	Cu MIDIVAL	Red		0608050	20	0708050	1500
60A	Cu MIDIVAL	Yellow		0608060	20	0708060	1500
70A	Cu MIDIVAL	Brown		0608070	20	0708070	1500
80A	Cu MIDIVAL	White		0608080	20	0708080	1500
100A	Cu MIDIVAL	Blue		0608100	20	0708100	1500
125A	Cu MIDIVAL	Pink		0608125	20	0708125	1500
150A	Cu MIDIVAL	Grey		0608150	20	0708150	1500
175A	Cu MIDIVAL	Light Brown		0608175	20	0708175	1500
200A	Cu MIDIVAL	Violet		0608200	20	0708200	1500

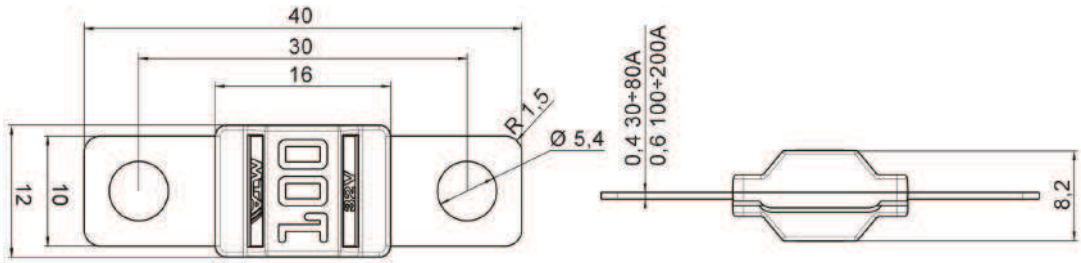

MEGACOMPACT®

AMP	DESCRIPTION	COLOUR		P/N BOX	M.O.Q.	P/N BULK	M.O.Q.
80A	MEGACOMPACT	Red		0615080	20	0715080	700
100A	MEGACOMPACT	Yellow		0615100	20	0715100	700
125A	MEGACOMPACT	Green		0615125	20	0715125	700
150A	MEGACOMPACT	Orange		0615150	20	0715150	700
175A	MEGACOMPACT	White		0615175	20	0715175	700
200A	MEGACOMPACT	Blue		0615200	20	0715200	700
225A	MEGACOMPACT	Beige		0615225	20	0715225	700
250A	MEGACOMPACT	Pink		0615250	20	0715250	700

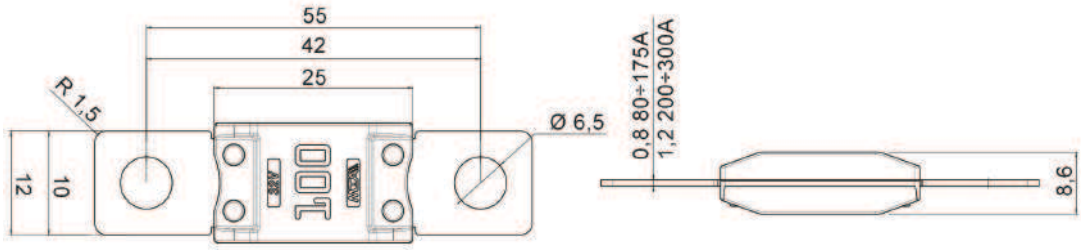

MEGAVAL®

AMP	DESCRIPTION	COLOUR		P/N BLISTER	M.O.Q.	P/N BULK	M.O.Q.
100A	MEGAVAL	Yellow		0601100	20	0701100	700
125A	MEGAVAL	Green		0601125	20	0701125	700
150A	MEGAVAL	Orange		0601150	20	0701150	700
175A	MEGAVAL	White		0601175	20	0701175	700
200A	MEGAVAL	Blue		0601200	20	0701200	700
225A	MEGAVAL	Beige		0601225	20	0701225	700
250A	MEGAVAL	Pink		0601250	20	0701250	700
300A	MEGAVAL	Grey		0601300	20	0701300	700
400A	MEGAVAL	Violet		0601401	20	0701401	700
500A	MEGAVAL	Brown		0601600	20	0701600	700

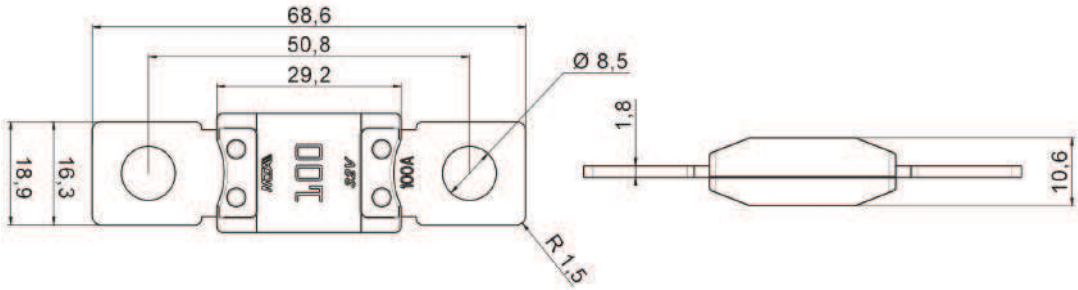

MEGAVAL® CU

NEW

AMP	DESCRIPTION	COLOUR.		P/N BOX	M.O.Q.	P/N BULK	M.O.Q.
100	Cu MEGAVAL	Yellow		0611100	20	0711100	400
125	Cu MEGAVAL	Green		0611125	20	0711125	400
150	Cu MEGAVAL	Orange		0611150	20	0711150	400
175	Cu MEGAVAL	White		0611175	20	0711175	400
200	Cu MEGAVAL	Blue		0611200	20	0711200	400
225	Cu MEGAVAL	Light Brown		0611225	20	0711225	400
250	Cu MEGAVAL	Pink		0611250	20	0711250	400

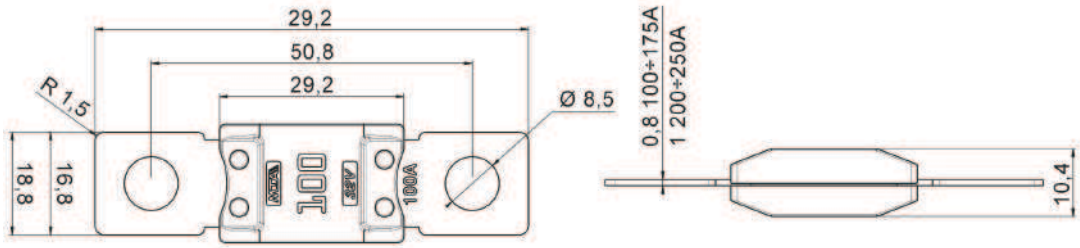

POWERVAL®

AMP	DESCRIPTION	COLOUR		P/N BLISTER	M.O.Q.	P/N BULK	M.O.Q.
CAL.1	POWERVAL	Grey		0601350	20	0701350	700
CAL.2	POWERVAL	Black		0601400	20	0701400	700
CAL.3	POWERVAL	Red		0601450	20	0701450	700
CAL.4	POWERVAL	Brown		0601500	20	0701500	700
CAL.5	POWERVAL	Wheat Grey		0601700	1	0701700	700

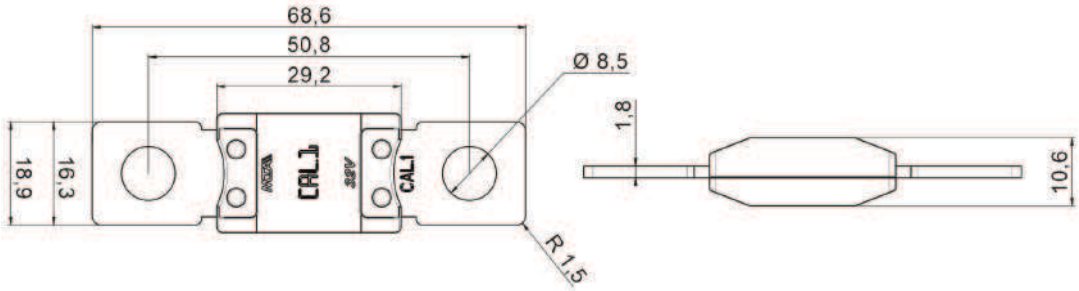

JAPVAL®

1

2

IMG	AMP	DESCRIPTION	COLOUR		P/N BLISTER	M.O.Q.	P/N BULK	M.O.Q.
1	15A	MICRO FEMALE 10	Grey		0404015	20	0404016	500
	20A	MICRO FEMALE 10	Azure		0404020	20	0404021	500
	25A	MICRO FEMALE 10	White		0404025	20	0404026	500
	30A	MICRO FEMALE 10	Pink		0404030	20	0404031	500
	40A	MICRO FEMALE 10	Green		0404040	20	0404041	500
2	20A	MICRO FEMALE 14	Azure		0424020	20	0424021	500
	25A	MICRO FEMALE 14	White		0424025	20	0424026	500
	30A	MICRO FEMALE 14	Pink		0424030	20	0424031	500
	40A	MICRO FEMALE 14	Green		0424040	20	0424041	500
	50A	MICRO FEMALE 14	Red		0424050	20	0424051	500
	60A	MICRO FEMALE 14	Yellow		0424060	20	0424061	500

JAPVAL®

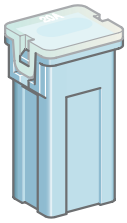

1

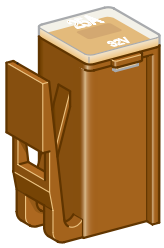

2

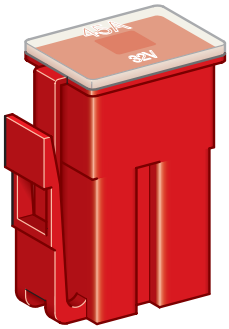

3

IMG	AMP	DESCRIPTION	COLOUR		P/N BLISTER	M.O.Q.	P/N BULK	M.O.Q.
1	20A	MINI FEMALE 14	Azure		0474020	20	0474021	500
	30A	MINI FEMALE 14	Pink		0474030	20	0474031	500
	40A	MINI FEMALE 14	Green		0474040	20	0474041	500
	50A	MINI FEMALE 14	Red		0474050	20	0474051	500
	60A	MINI FEMALE 14	Yellow		0474060	20	0474061	500
	70A	MINI FEMALE 14	Brown		0474070	20	0474071	500
	80A	MINI FEMALE 14	Black		0474080	20	0474081	500
2	25A	MINI CLIP	Brown		0476025	20	0476026	500
	30A	MINI CLIP	Green		0476030	20	0476031	500
3	45A	CLIP	Red		0477045	20	0477046	500
	65A	CLIP	Black		0477065	20	0477066	500
	75A	CLIP	Grey		0477075	20	0477076	500

JAPVAL®

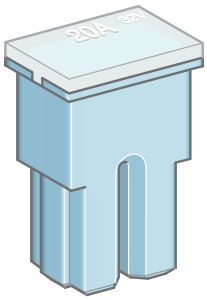

1

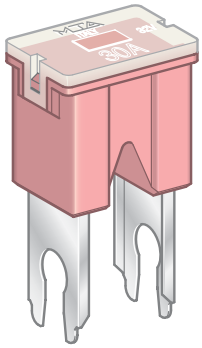

2

IMG	AMP	DESCRIPTION	COLOUR		P/N BLISTER	M.O.Q.	P/N BULK	M.O.Q.
1	20A	FEMALE	Azure		0470020	20	0470021	500
	30A	FEMALE	Pink		0470030	20	0470031	500
	40A	FEMALE	Green		0470040	20	0470041	500
	50A	FEMALE	Red		0470050	20	0470051	500
	60A	FEMALE	Yellow		0470060	20	0470061	500
	80A	FEMALE	Black		0470080	20	0470081	500
	100A	FEMALE	Blue		0470100	20	0470101	500
2	30A	MALE	Pink		0471030	20	0471031	500
	40A	MALE	Green		0471040	20	0471041	500
	50A	MALE	Red		0471050	20	0471051	500
	60A	MALE	Yellow		0471060	20	0471061	500
	80A	MALE	Black		0471080	20	0471081	500
	100A	MALE	Blue		0471100	20	0471101	500

JAPVAL®

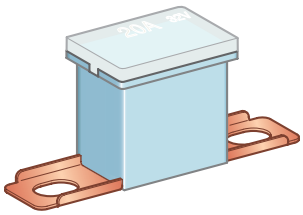

1

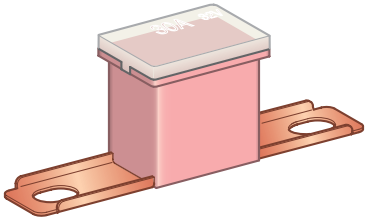

2

IMG	AMP	DESCRIPTION	COLOUR		P/N BLISTER	M.O.Q.	P/N BULK	M.O.Q.
1	20A	MALE 48	Azure		0475020	20	0475021	500
	30A	MALE 48	Pink		0475030	20	0475031	500
	40A	MALE 48	Green		0475040	20	0475041	500
	50A	MALE 48	Red		0475050	20	0475051	500
	60A	MALE 48	Yellow		0475060	20	0475061	500
	70A	MALE 48	Brown		0475070	20	0475071	500
	80A	MALE 48	Black		0475080	20	0475081	500
	100A	MALE 48	Blue		0475100	20	0475101	500
2	30A	MALE 62	Pink		0472030	20	0472031	500
	40A	MALE 62	Green		0472040	20	0472041	500
	50A	MALE 62	Red		0472050	20	0472051	500
	60A	MALE 62	Yellow		0472060	20	0472061	500
	80A	MALE 62	Black		0472080	20	0472081	500
	100A	MALE 62	Blue		0472100	20	0472101	500

MINI LOW PROFILE

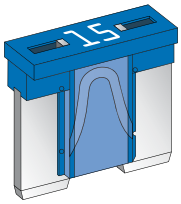

AMP	DESCRIPTION	COLOUR		P/N BLISTER	M.O.Q.	P/N BULK	M.O.Q.
2A	MINI LOW PROFILE	Grey		0600210	200	0700210	200
3A	MINI LOW PROFILE	Violet		0600220	200	0700220	200
4A	MINI LOW PROFILE	Pink		0600230	200	0700230	200
5A	MINI LOW PROFILE	Beige		0600240	200	0700240	200
7,5A	MINI LOW PROFILE	Brown		0600250	200	0700250	200
10A	MINI LOW PROFILE	Red		0600260	200	0700260	200
15A	MINI LOW PROFILE	Blue		0600270	200	0700270	200
20A	MINI LOW PROFILE	Yellow		0600280	200	0700280	200
25A	MINI LOW PROFILE	Natural		0600290	200	0700290	200
30A	MINI LOW PROFILE	Green		0600302	200	0700302	200

CONTINENTAL

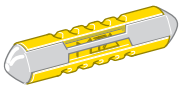

AMP	DESCRIPTION	COLOUR		P/N BOX	M.O.Q.	P/N BULK	M.O.Q.
5A	FIAT 9.91806	Yellow		0200140	100	0300140	5000
8A	FIAT 9.91806	Black		0200150	100	0300150	5000
16A	FIAT 9.91806	Green		0200170	100	0300170	5000
25A	FIAT 9.91806	Brown		0200180	100	0300180	5000
5A	DIN 72581	Yellow		0200140	100	0300140	5000
8A	DIN 72581	White		0200151	100	0300151	5000
16A	DIN 72581	Red		0200171	100	0300171	5000
25A	DIN 72581	Blue		0200181	100	0300181	5000
5A	BNA 709	Violet		0200142	100	0300142	5000
8A	BNA 709	Blue		0200149	100	0300149	5000
10A	BNA 709	Green		0200152	100	0300152	5000
16A	BNA 709	Yellow		0200172	100	0300172	5000
25A	BNA 709	Red		0200182	100	0300182	5000

GLASS

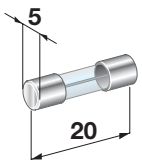

1

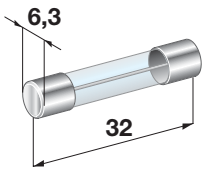

2

IMG	AMP	DESCRIPTION		P/N BOX	M.O.Q.	P/N BULK	M.O.Q.
1	500MA	GLASS FUSE 5X20		0430300	50		
	1A	GLASS FUSE 5X20		0430400	50	0530400	1000
	2A	GLASS FUSE 5X20		0430500	50	0530500	1000
	3A	GLASS FUSE 5X20		0430600	50	0530600	1000
	4A	GLASS FUSE 5X20		0430700	50		
	5A	GLASS FUSE 5X20		0430800	50	0530800	1000
	6A	GLASS FUSE 5X20		0430900	50		
	8A	GLASS FUSE 5X20		0431000	50		
	10A	GLASS FUSE 5X20		0431100	50	0531100	1000
	15A	GLASS FUSE 5X20		0431300	50		
	20A	GLASS FUSE 5X20		0431400	50		
2	2A	GLASS FUSE 6,3X32		0433200	50	0533200	1000
	3A	GLASS FUSE 6,3X32		0433300	50		
	5A	GLASS FUSE 6,3X32		0433400	50	0533400	1000
	7,5A	GLASS FUSE 6,3X32		0433450	50		
	10A	GLASS FUSE 6,3X32		0433500	50	0533500	1000
	15A	GLASS FUSE 6,3X32		0433600	50	0533600	1000
	20A	GLASS FUSE 6,3X32		0433700	50	0533700	1000
	25A	GLASS FUSE 6,3X32		0433800	50	0533800	1000
	30A	GLASS FUSE 6,3X32		0433850	50	0533850	1000
	35A	GLASS FUSE 6,3X32		0433900	50	0533900	1000

STRIP

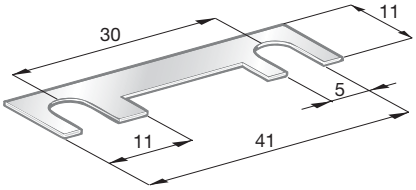

AMP	DESCRIPTION		P/N BOX	M.O.Q.
30A	STRIP FUSE		0200296	100
40A	STRIP FUSE		0200300	100
50A	STRIP FUSE		0200297	100
60A	STRIP FUSE		0200301	100
80A	STRIP FUSE		0200298	100
100A	STRIP FUSE		0200299	100

ASSORTMENT

1

2

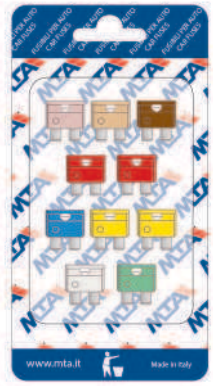

3

4

IMG	DESCRIPTION	P/N BLISTER	M.O.Q.
1	10 UNIVAL FUSES 3A (1 PCS), 5A (1 PCS), 7,5A (1 PCS), 10A (2 PCS), 15A (1 PCS), 20A (2 PCS), 25A (1 PCS), 30A (1 PCS)	0600418	20
2	8 UNIVAL FUSES 3A (1 PCS), 5A (1 PCS), 7,5A (1 PCS), 10A (1 PCS), 15A (1 PCS), 20A (1 PCS), 25A (1 PCS), 30A (1 PCS)	0600407	50
3	10 UNIVAL FUSES 3A (1 PCS), 5A (1 PCS), 7,5A (1 PCS), 10A (2 PCS), 15A (1 PCS), 20A (2 PCS), 25A (1 PCS), 30A (1 PCS)	0600408	50
4	6 MINIVAL FUSES 3A (1 PCS), 5A (1 PCS), 10A (1 PCS), 15A (1 PCS), 20A (1 PCS), 30A (1 PCS)	3004000	50

ASSORTMENT

80 MINIVAL

80 UNIVAL

160 UNIVAL

1

2

3

IMG	DESCRIPTION	P/N BOX	M.O.Q.
1	ASSORTMENT BOX 80 MINIVAL FUSES 2A (10 PCS), 3A (3 PCS), 4A (10 PCS), 5A (3 PCS), 7,5A (10 PCS), 10A (10 PCS),	0600010	1
	15A (10 PCS), 20A (10 PCS), 25A (4 PCS), 30A (10 PCS)		
2	ASSORTMENT BOX 80 UNIVAL FUSES 4A (10 PCS), 5A (10 PCS), 7,5A (10 PCS), 10A (10 PCS), 15A (10 PCS),	0650015	1
	20A (10 PCS), 25A (10 PCS), 30A (10 PCS)		
3	ASSORTMENT BOX 160 UNIVAL FUSES 4A (20 PCS), 5A (20 PCS), 7,5A (20 PCS), 10A (20 PCS), 15A (20 PCS),	0650016	1
	20A (20 PCS), 25A (20 PCS), 30A (20 PCS)		

POWER DISTRIBUTION UNITS

CBA X73

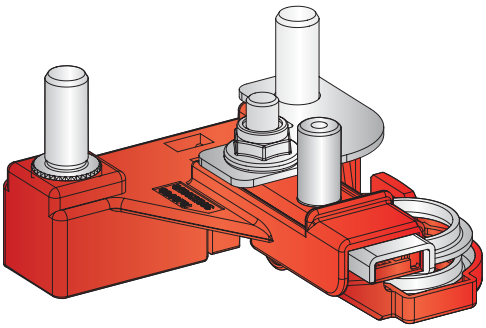

1

IMG	DESCRIPTION	P/N	M.O.Q.
1	PRE-MOUNTED HOUSING FOR 1 POWER/MEGAVAL WITH BATTERY TERMINAL	0100703	1

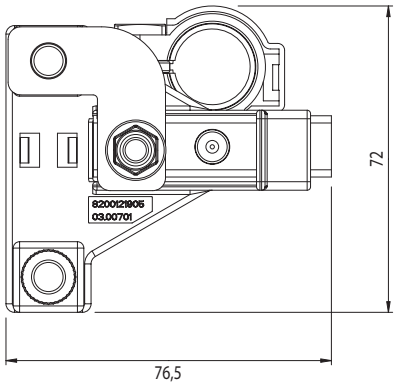

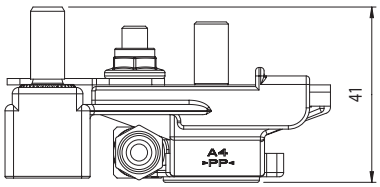

CONNECTIONS AND FIXINGS

1608180
1608190

1708110
1708120

1608196

CBA J81 L4

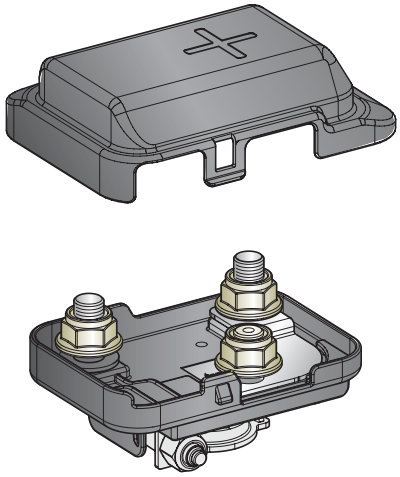

1

IMG	DESCRIPTION	P/N	M.O.Q.
1	PRE MOUNTED HOUSING FOR 1 MEGA/POWERVAL WITH COVER AND BATTERY TERMINAL	0101703	1

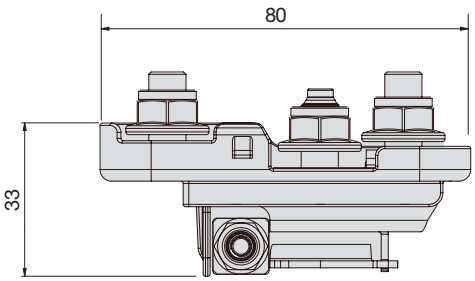

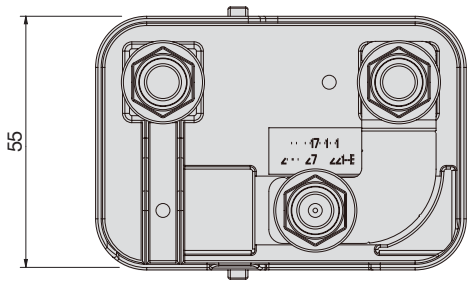

CONNECTIONS AND FIXINGS

CBA J81 L4

3 - WAY MIDIVAL®

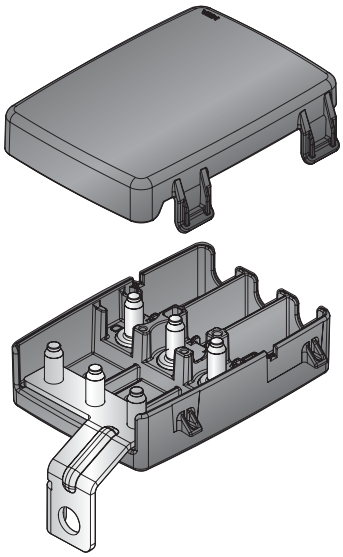

1

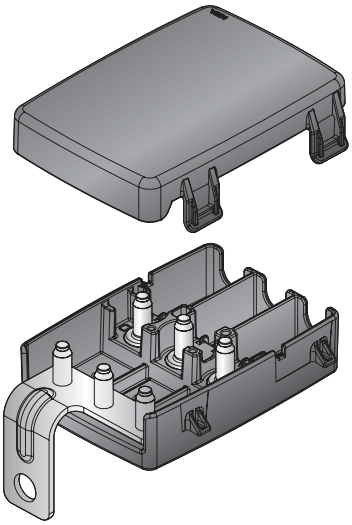

2

IMG	DESCRIPTION	P/N	M.O.Q.
1	PRE MOUNTED HOUSING DX FOR 3 MIDIVAL WITH COVER AND BUS BAR	0300442	1
2	PRE MOUNTED HOUSING SX FOR 3 MIDIVAL WITH COVER AND BUS BAR	0300468	1

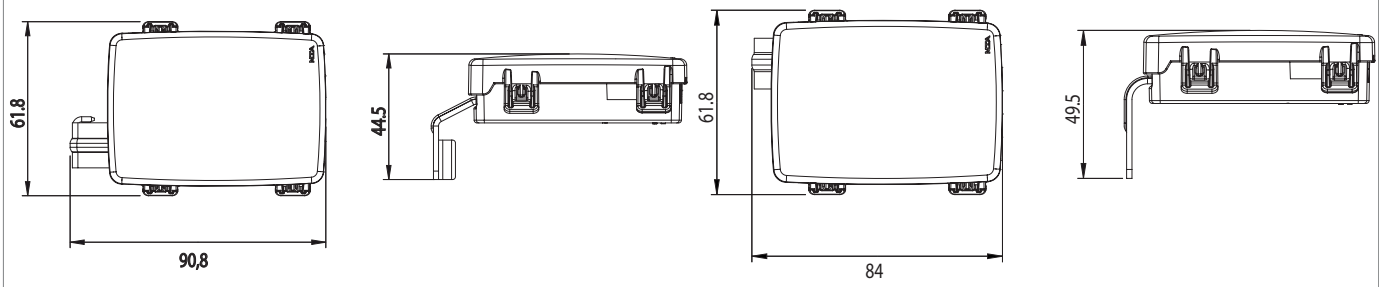

CONNECTIONS AND FIXINGS

IMG 1-2

MIDI
POL A,B,D

CDB

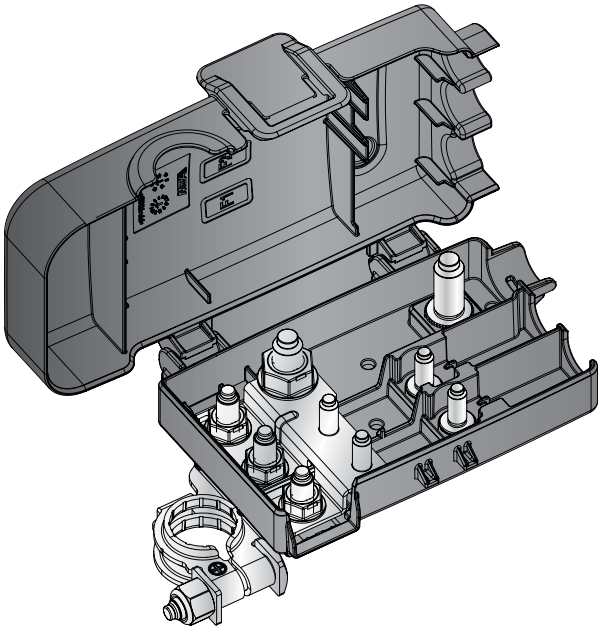

1

IMG	DESCRIPTION	P/N	M.O.Q.
1	PRE MOUNTED HOUSING FOR 2 MIDIVAL AND 1 CAL/MEGAVAL WITH BATTERY TERMINAL	0300839	20

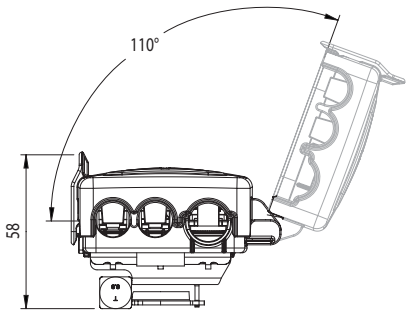

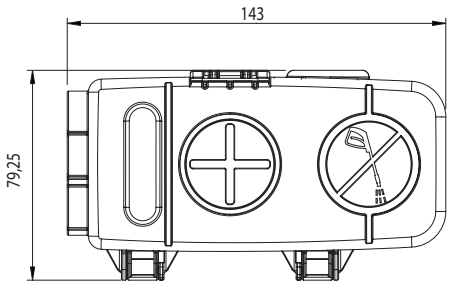

CONNECTIONS AND FIXINGS

MIDI
POL A,B

MEGA

LINK BATT

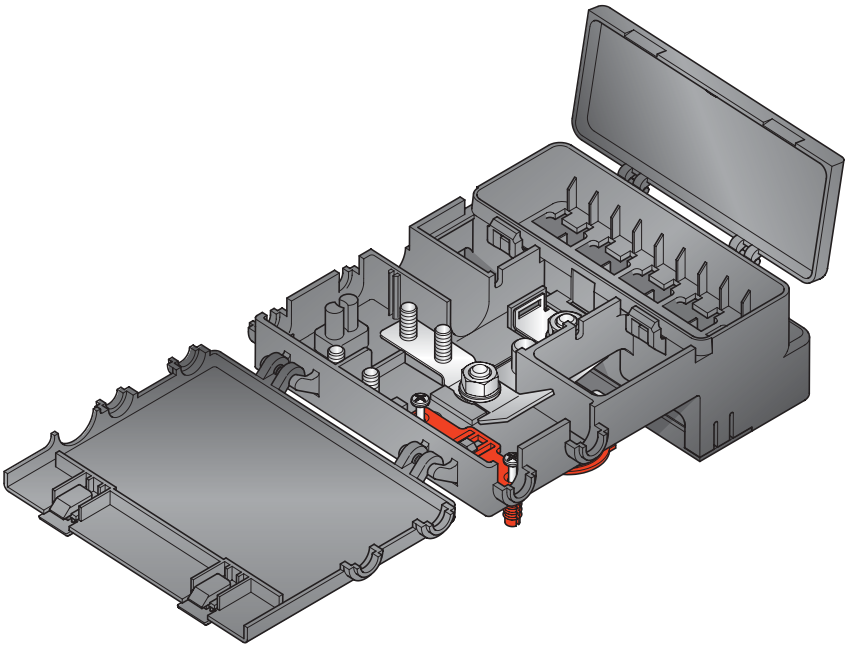

1

IMG	DESCRIPTION	P/N	M.O.Q.
1	PRE MOUNTED HOUSING FOR 8 MAXIVAL AND 2 MIDIVAL	0100710	1

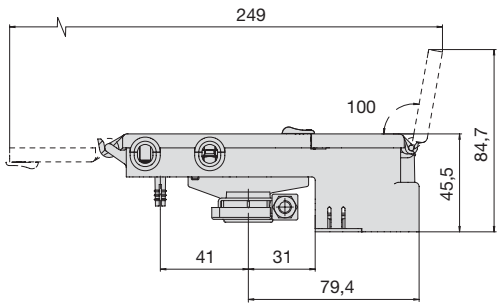

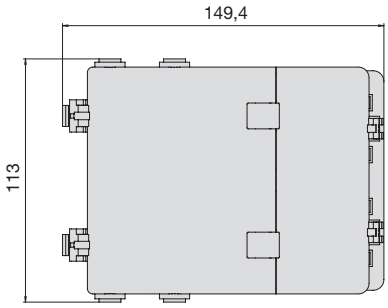

CONNECTIONS AND FIXINGS

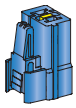
4540315

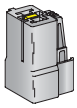
4540345

4540325

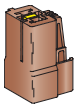
4540335

4545100

MIDI

SQR-A

JUMP START

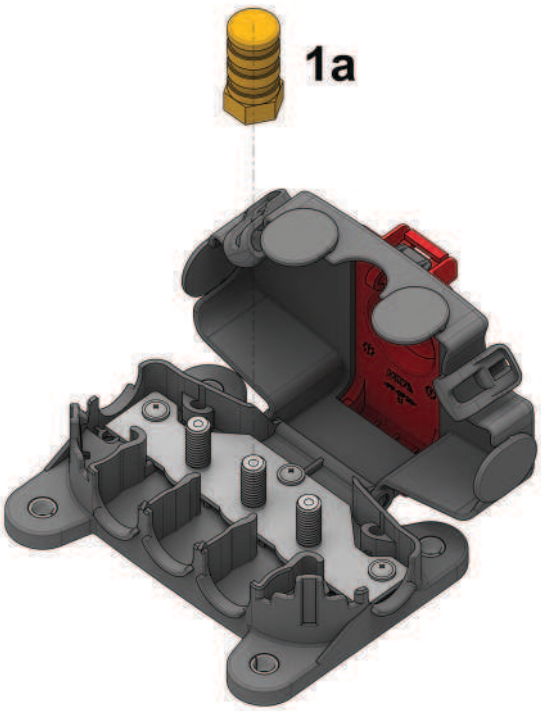

1

IMG	DESCRIPTION	P/N BULK	M.O.Q.
1	JUMP START NODE	4541203	60
1a	JUMP START PLUG FOR POWER DISTRIBUTION	4541204	200

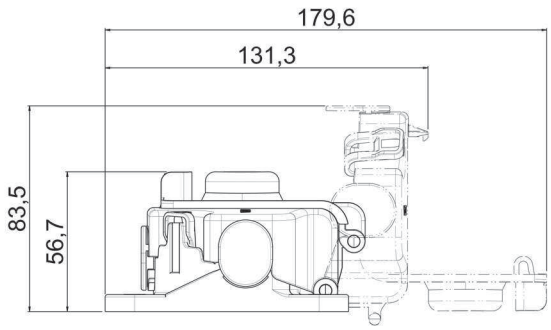

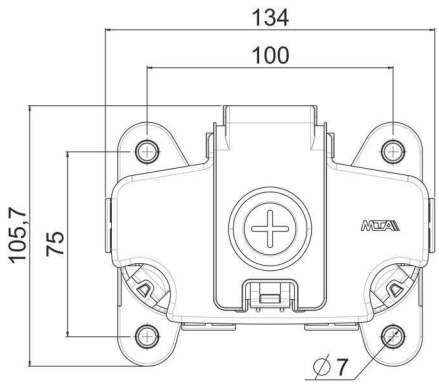

CONNECTIONS AND FIXINGS

TUBOLAR M8

PDU 2M

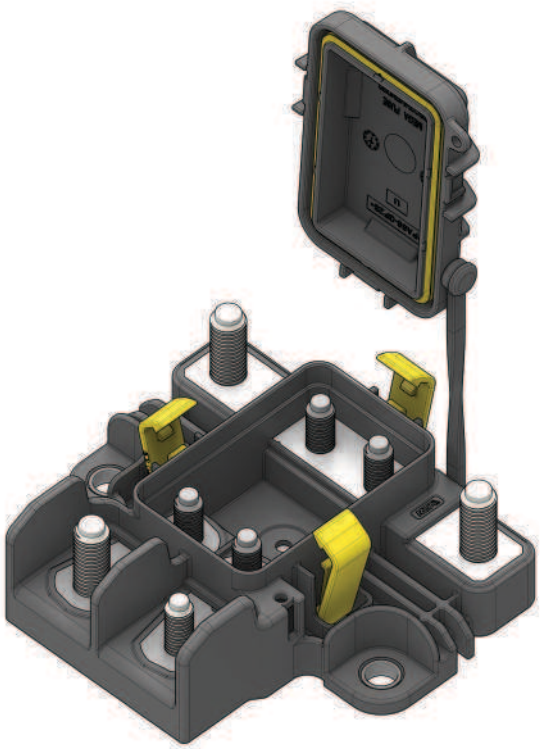

1

IMG	DESCRIPTION	P/N	M.O.Q.
1	PRE MOUNTED HOUSING FOR 2 MEGAVAL WITH COVER	0301887	1

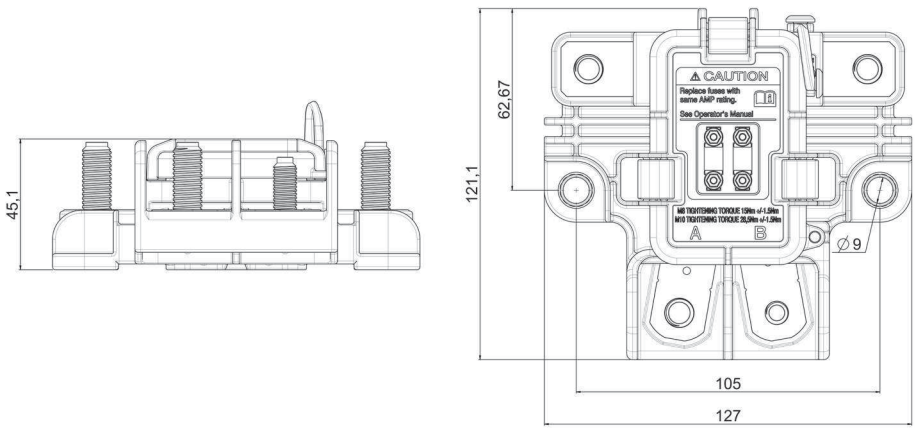

CONNECTIONS AND FIXINGS

TUBOLAR

2 , 3 - WAY WATER PROOF PDU

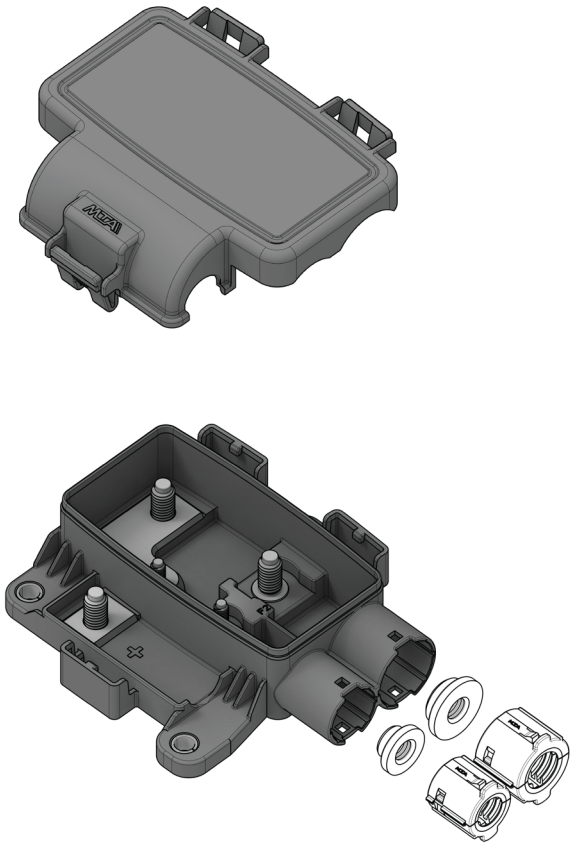

1

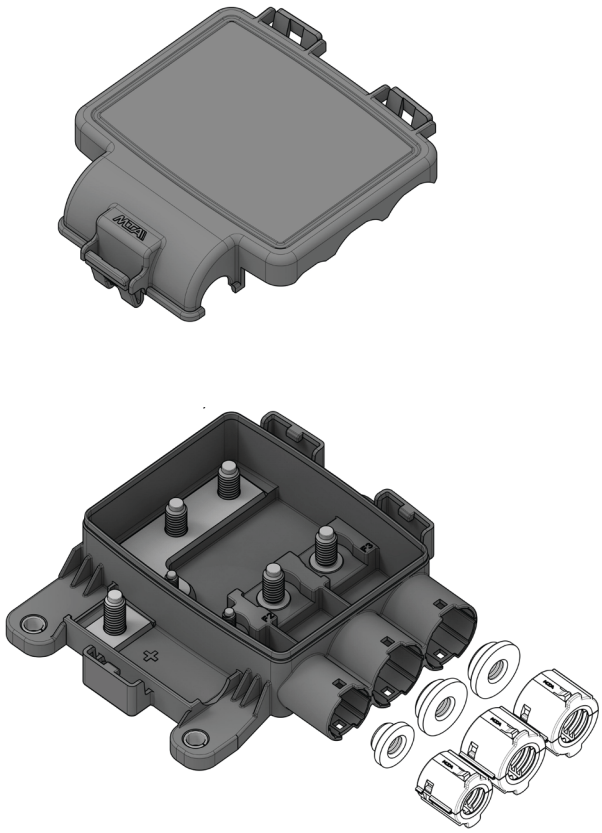

2

IMG	DESCRIPTION	P/N BOX	M.O.Q.
1	PRE MOUNTED HOUSING FOR 1 MIDIVAL AND 1 MEGAVAL WITH COVER	0301053	20
2	PRE MOUNTED HOUSING FOR 1 MIDIVAL AND 2 MEGAVAL WITH COVER	0301045	20

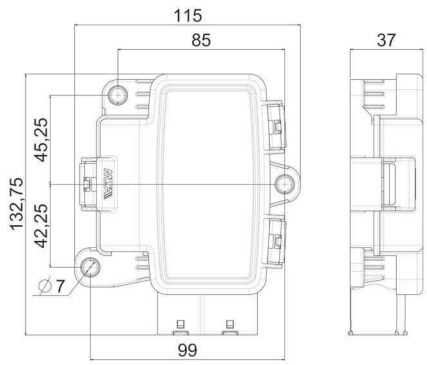

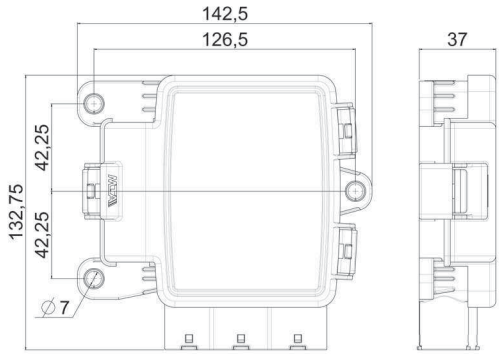

CONNECTIONS AND FIXINGS

IMG	1+2	1+2	1+2	2	1+2	1+2	1+2
	TUBOLAR	MIDI M5 POLA	MEGA M8 POL A	MEGA M8 POL B	1607510	GASKET	TUBE RETAINER

RETAINER & GASKETS

1

2

IMG	DESCRIPTION	MATERIAL	COLOUR	D	d	P/N BULK	M.O.Q.
1	TUBE RETAINER	PBT	Black	19,6	6	0300454	200
	TUBE RETAINER	PBT	Black	19,6	8	0300452	200
	TUBE RETAINER	PBT	Black	19,6	11,4	0300465	200
	TUBE RETAINER	PBT	Black	24,6	12,8	0300455	200
	TUBE RETAINER	PBT	Black	24,6	14,3	0300464	200
	TUBE RETAINER	PBT	Black	24,6	15,2	0300557	200
2	GASKET	SILICON	Green	18	2	0300456	200
	GASKET	SILICON	Blue	18	3,7	0300457	200
	GASKET	SILICON	Yellow	18	6	0300463	200
	GASKET	SILICON	Red	18	8	0300458	200
	CAVITY PLUG	SILICON	Natural	18	-	0350459	200
	GASKET	SILICON	Yellow	23	8	0300460	200
	GASKET	SILICON	Green	23	10	0350558	200

4 - WAY MIDIVAL®

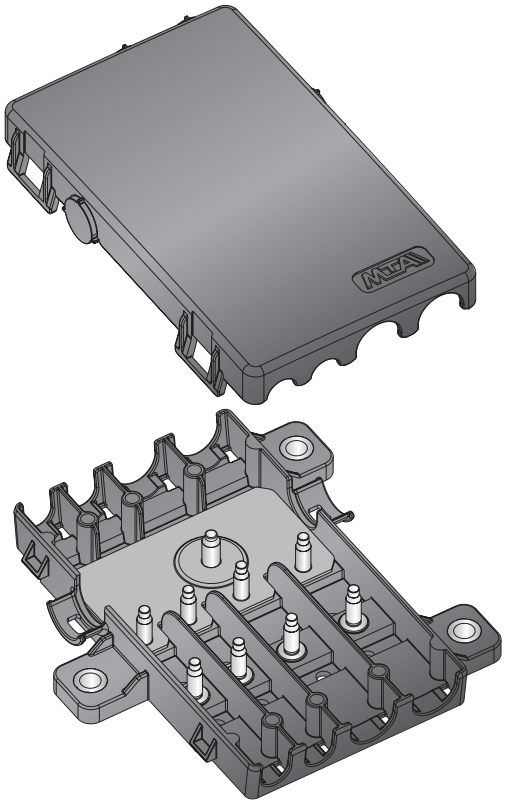

1

IMG	DESCRIPTION	P/N BOX	M.O.Q.
1	PRE MOUNTED HOUSING FOR 4 MIDIVAL WITH COVER, BUS BAR AND SELF LOCKING NUTS	0300552	1

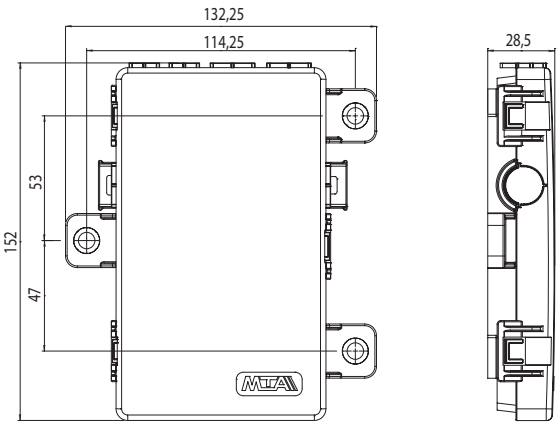

CONNECTIONS AND FIXINGS

1708250

1708246

SPLASH PROOF CONFIGURABLE PDU

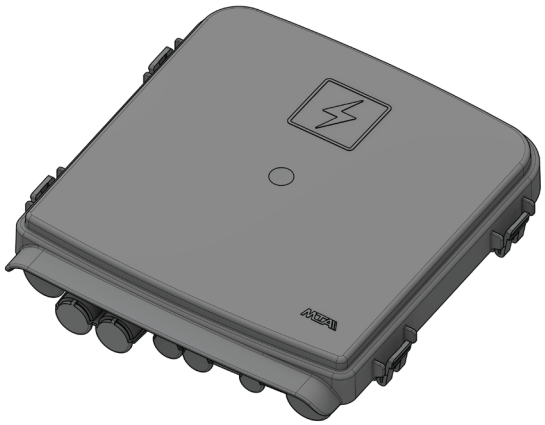

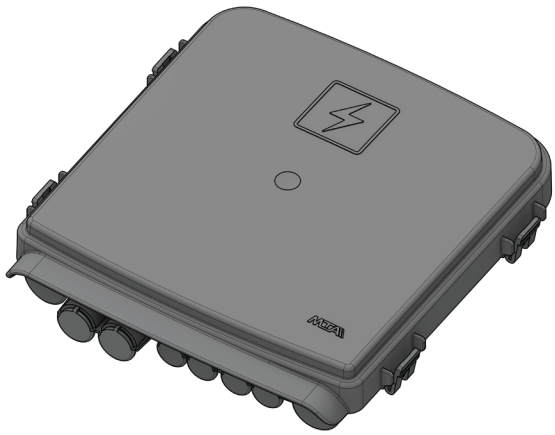

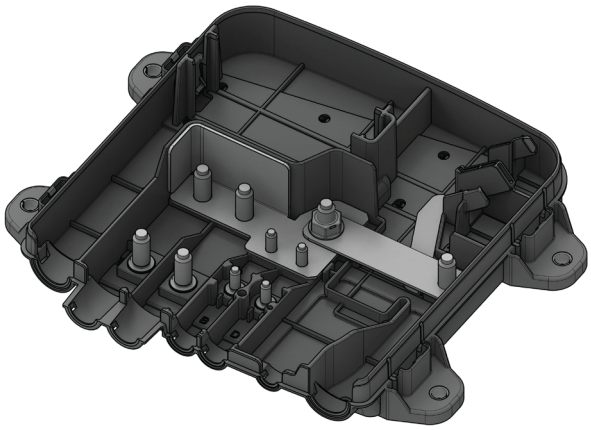

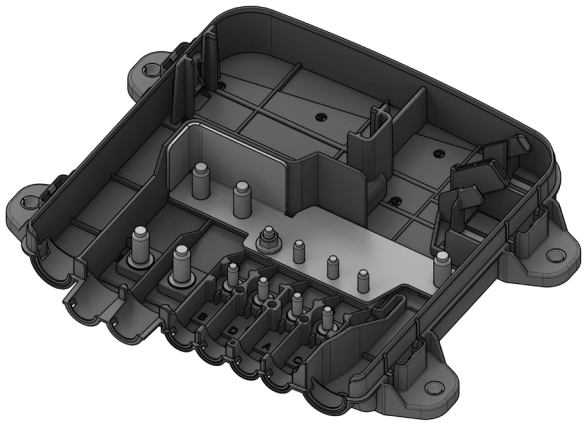

1 2

IMG	DESCRIPTION	P/N	M.O.Q.
1	PRE MOUNTED HOUSING FOR 2 MEGA/POWERVAL + 2 MIDIVAL W/ COVER AND BUS BAR. CAN ACCOMODATE ELECTRONIC BDS	0301865	1
2	PRE MOUNTED HOUSING FOR 4 MIDIVAL + 2 MEGAVAL + 5 MINIVAL WITH COVER AND BUS BAR	0301873	1

THESE PDU CAN ACCOMODATE
ANY FUSE/RELAY MODULE

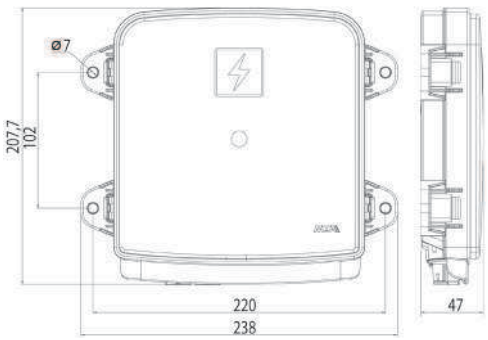

CONNECTIONS AND FIXINGS

IMG	1+2	2	1+2	1+2	1+2	1+2
	MIDI POL A,B	MIDI POL A,B,C,D	TUBOLAR M8	MUDULES	SML	F280

LINK BOX

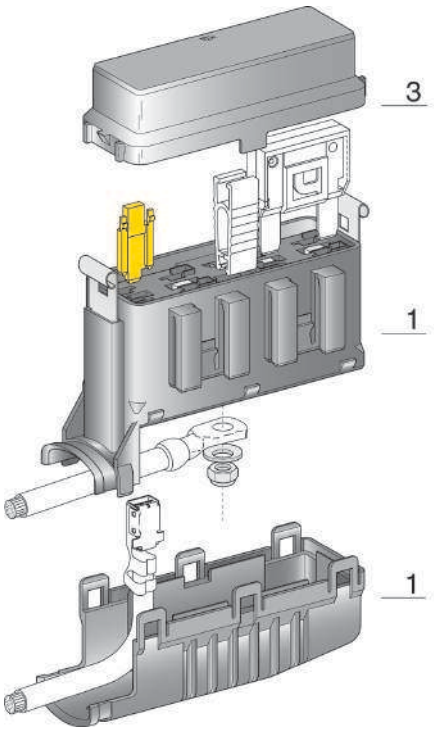

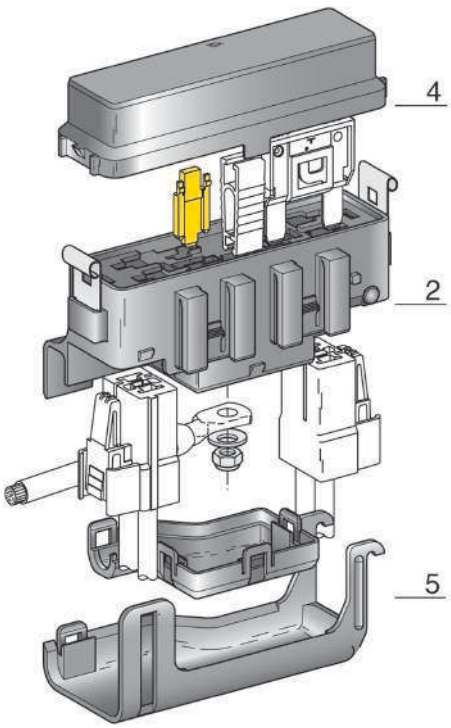

IMG	DESCRIPTION	WAY	MATERIAL	COLOUR	P/N KIT WITH COVER AND TERMINALS	M.O.Q.	P/N BULK	M.O.Q.
1	HOUSING + BOTTOM COVER + S.LOCK + NUT	4	PA66 GF25 PA66	■ Black	0100500	5	0300500	200
2	HOUSING + BOTTOM COVER + S.LOCK + NUT	4	PA66 GF25 PA66	■ Black	0100800	5	0300800	150
3	COVER WITH GASKET		PA66 GF25	■ Black			0300950	200
4	UPPER COVER WITH GASKET		PA66 GF25	■ Black			0300850	150
5	WIRE'S COVER		PA66	■ Black			0300849	400

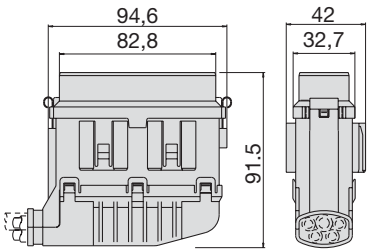

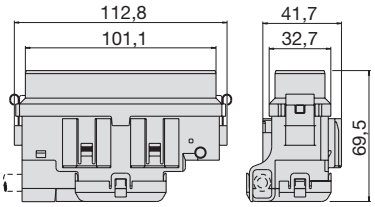

CONNECTIONS AND FIXINGS

IMG	1+2	1+2	1	1+2	1+2	1+2	2	2	1+2
			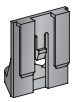	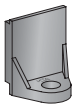			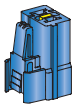	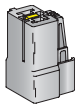	
	0300949	0300851	0300690	0300691	F800	1605000	4540315	4540345	4545100

MAIN DISTRIBUTION UNITS

FRAMES, BRACKETS & COVERS

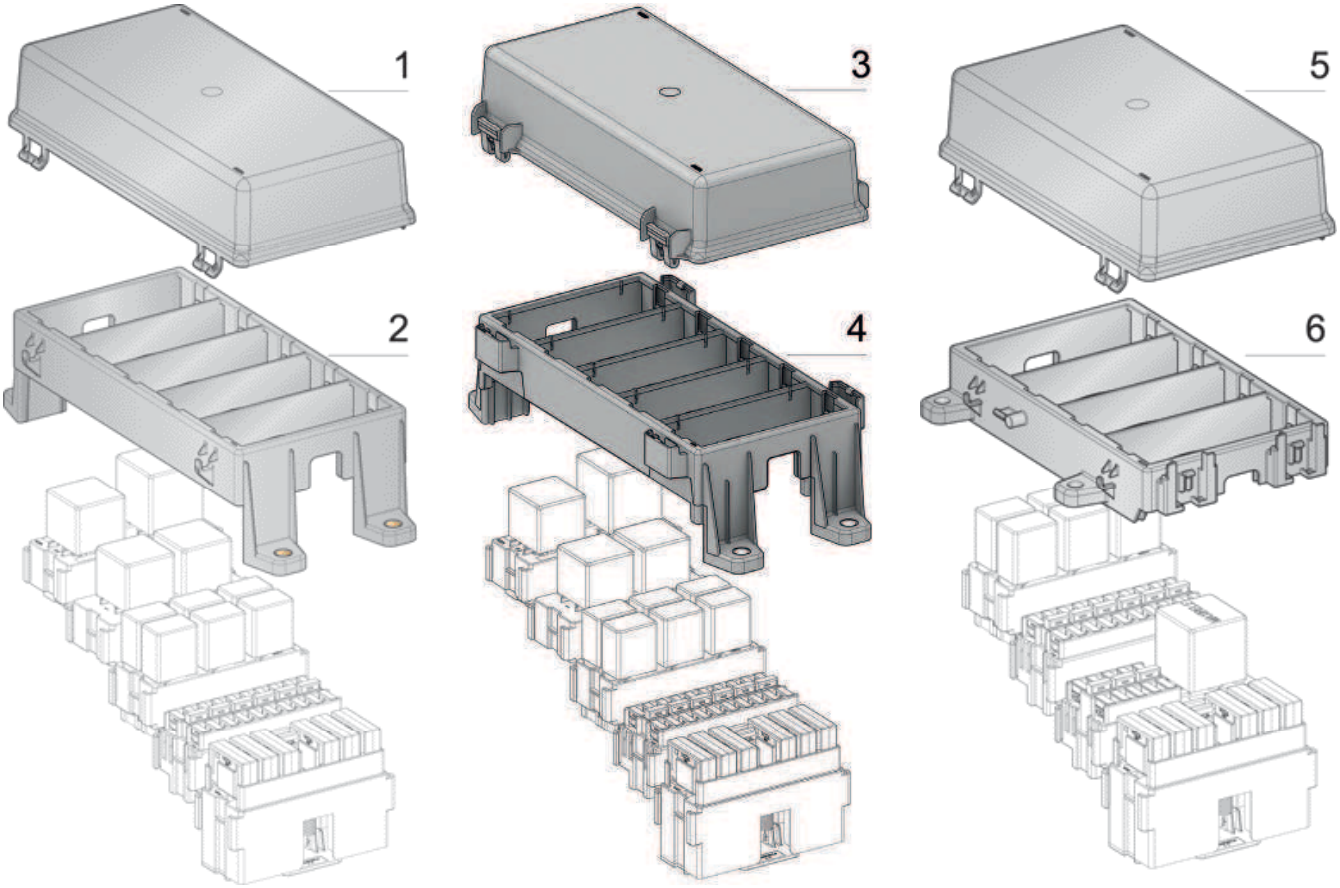

IMG	DESCRIPTION	WAY	MATERIAL	COLOUR		P/N BOX	M.O.Q.	P/N BULK	M.O.Q.
1	COVER	5	PP GF30	Grey		0101540	1	0301540	48
2	FRAME	5	PP GF30	Grey		0101450	1	0301450	85
3	COVER	5	PP GF30	Grey		0101707	1	0301707	85
4	FRAME	5	PP GF30	Grey		0101706	1	0301706	85
5	COVER	4	PP GF30	Grey		0101530	1	0301530	63
6	FRAME	4	PP GF30	Grey		0101520	1	0301520	63

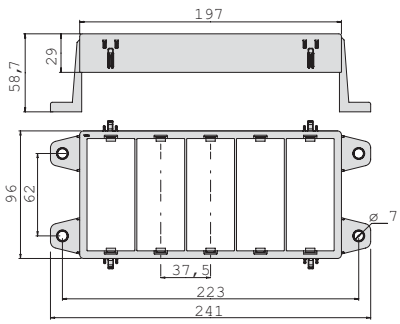

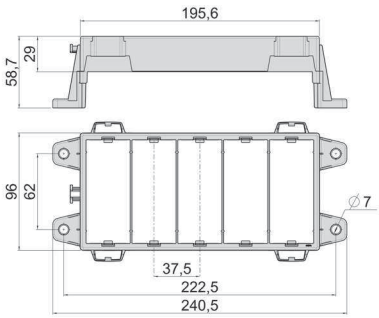

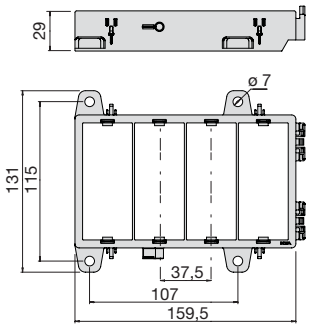

CONNECTIONS AND FIXINGS

IMG	2+4+6
	0301630

FRAMES, BRACKETS & COVERS

NEW

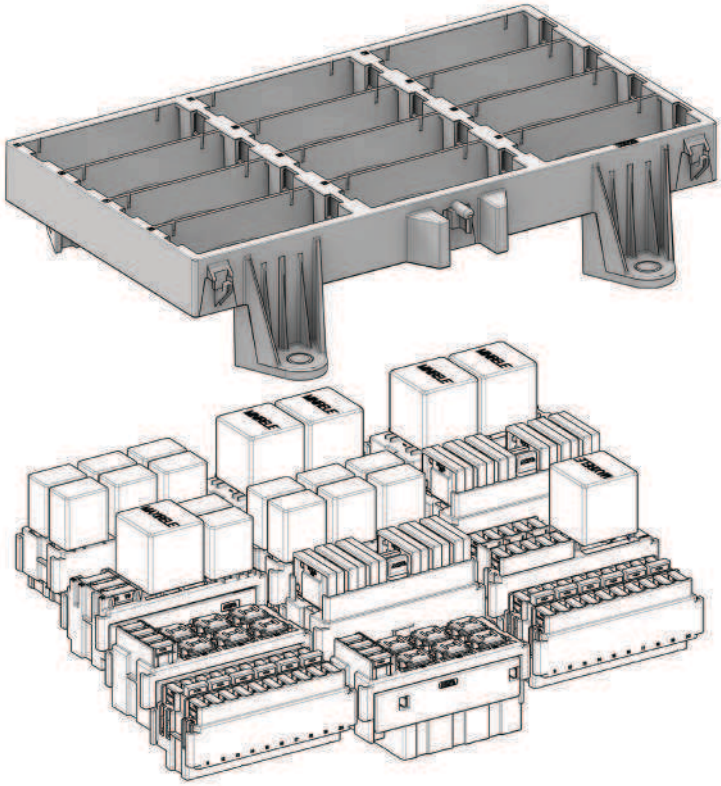

IMG	DESCRIPTION	WAY	MATERIAL	COLOUR		P/N BOX	M.O.Q.	P/N BULK	M.O.Q.
1	FRAME	12	PP GF30	Grey		0101682	1	0301682	104

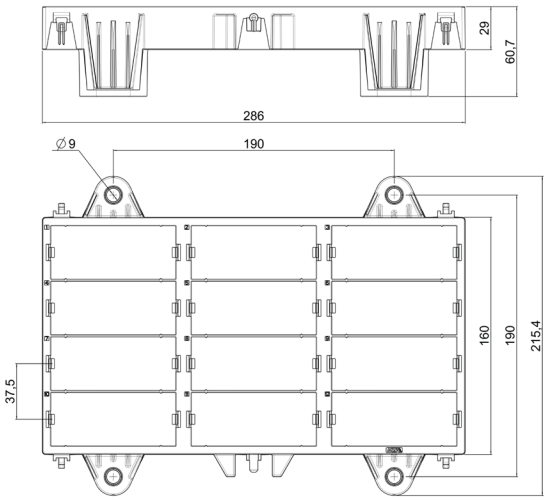

FRAMES, BRACKETS & COVERS

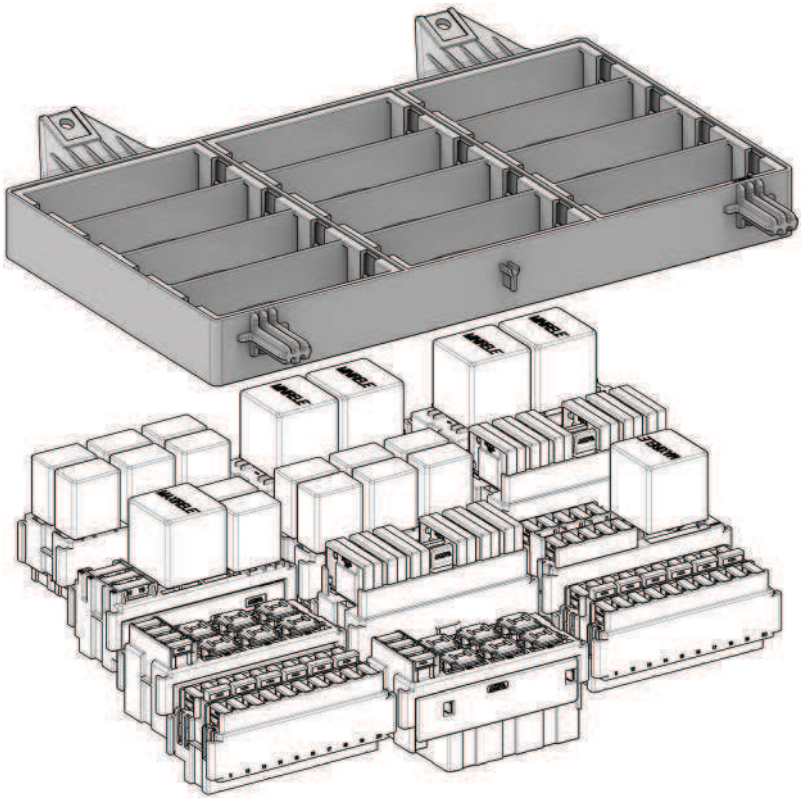

IMG	DESCRIPTION	WAY	MATERIAL	COLOUR		P/N BOX	M.O.Q.	P/N BULK	M.O.Q.
1	FRAME	12	PP GF30	Grey		0101680	1	0301680	104

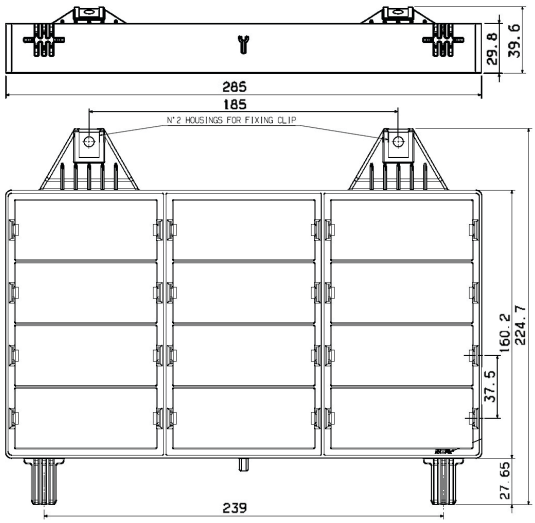

FRAMES, BRACKETS & COVERS

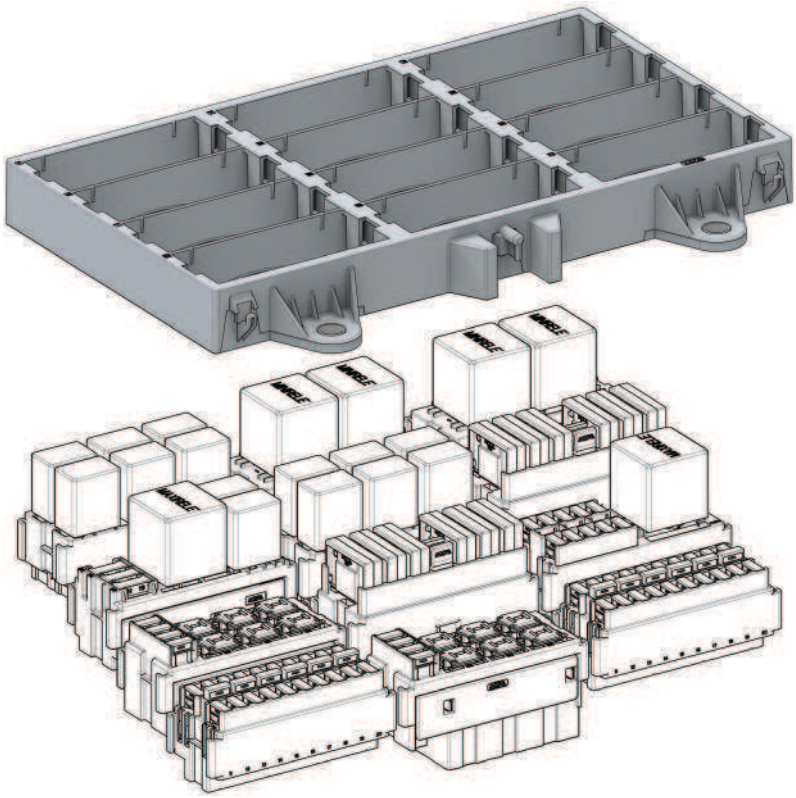

IMG	DESCRIPTION	WAY	MATERIAL	COLOUR		P/N BOX	M.O.Q.	P/N BULK	M.O.Q.
1	FRAME	12	PP GF30	Grey		0101681	1	0301681	104

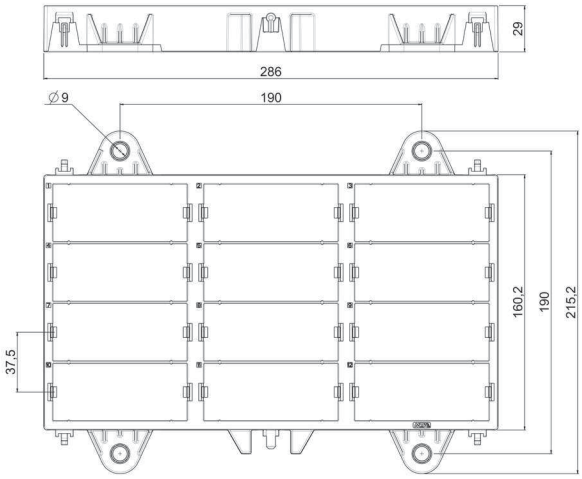

FRAMES, BRACKETS & COVERS

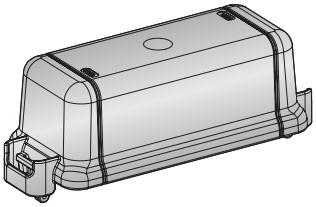

1

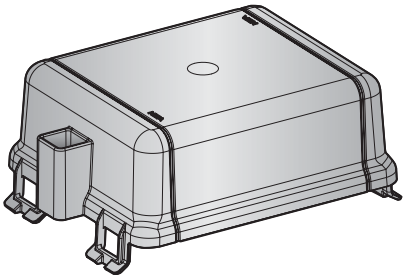

2

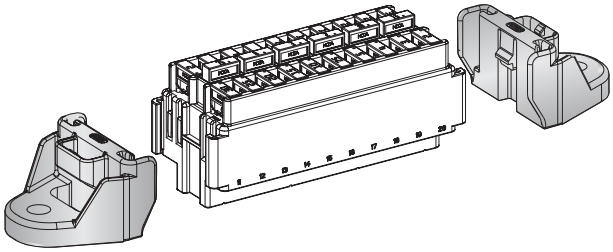

3

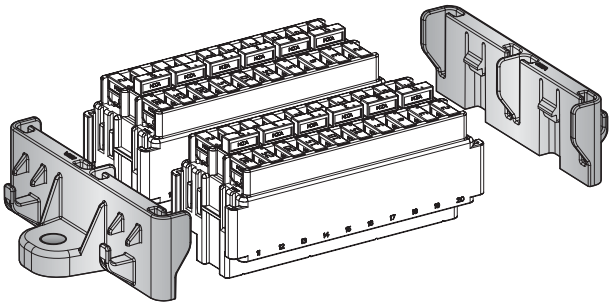

4

IMG	DESCRIPTION	WAY	MATERIAL	COLOUR		P/N BOX	M.O.Q.	P/N BULK	M.O.Q.
1	COVER	1	PP GF30	Grey		0101590	1	0301590	150
2	COVER	2	PP GF30	Grey		0101550	1	0301550	200
3	BRACKET	1	PP GF30	Grey		0101580	2	0301580	600
4	BRACKET	2	PP GF30	Grey		0100699	2	0300699	400

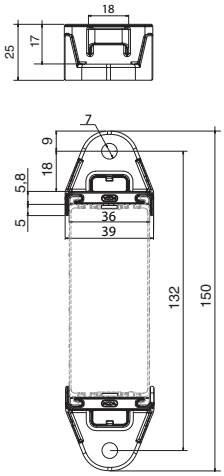

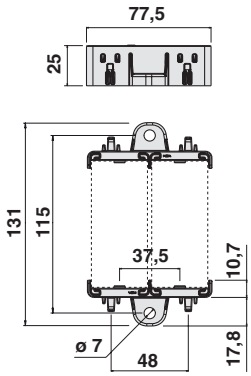

FRAMES, BRACKETS & COVERS

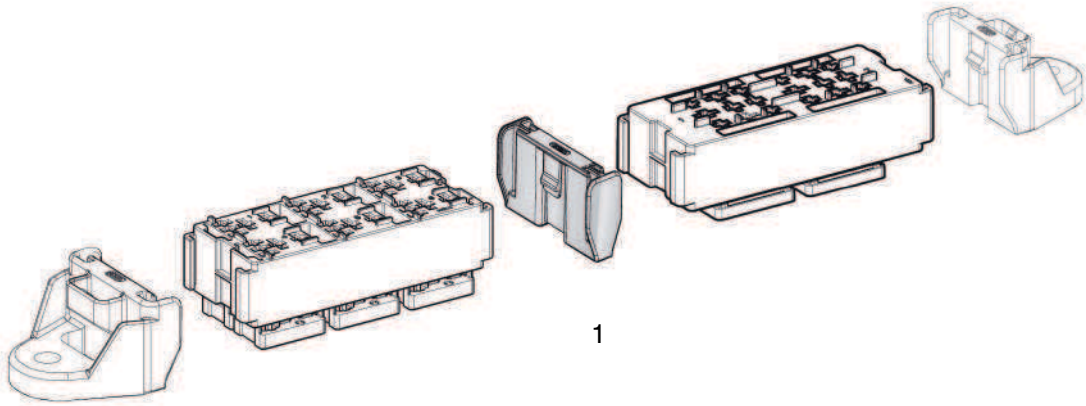

IMG	DESCRIPTION	WAY	MATERIAL	COLOUR		P/N BULK	M.O.Q.
1	BRACKET	1	PP GF30	Grey		0301620	250

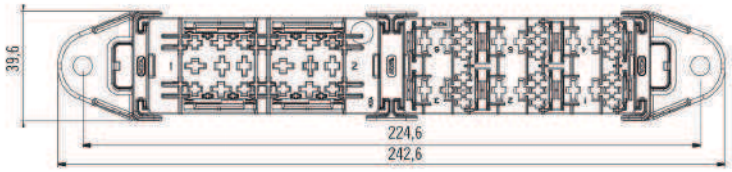

FRAMES, BRACKETS & COVERS

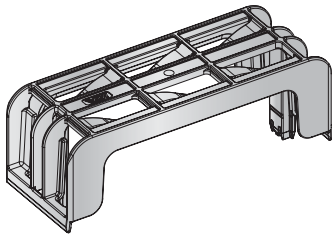

1

IMG	DESCRIPTION	MATERIAL	COLOUR		P/N BULK	M.O.Q.
1	COVER	PA66 - GF13	Grey		0301630	350

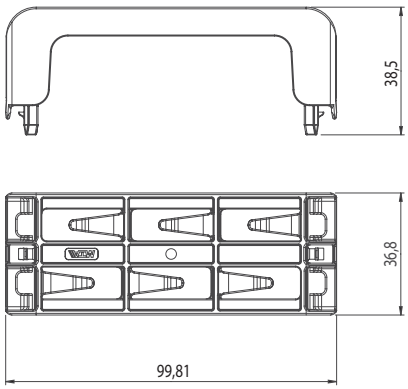

MODULES

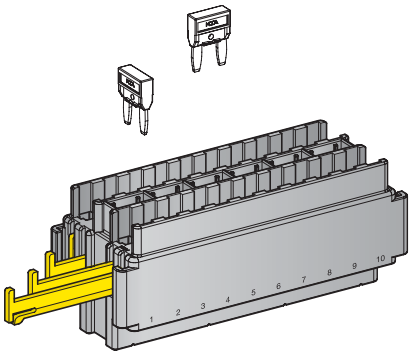

1

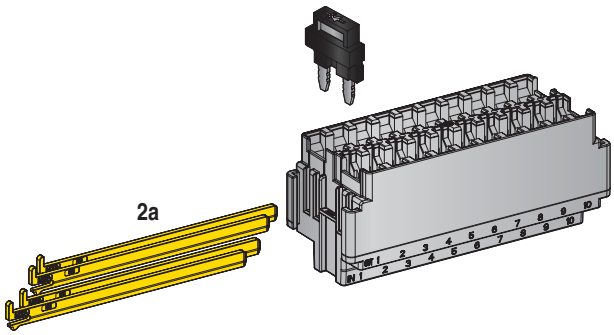

2

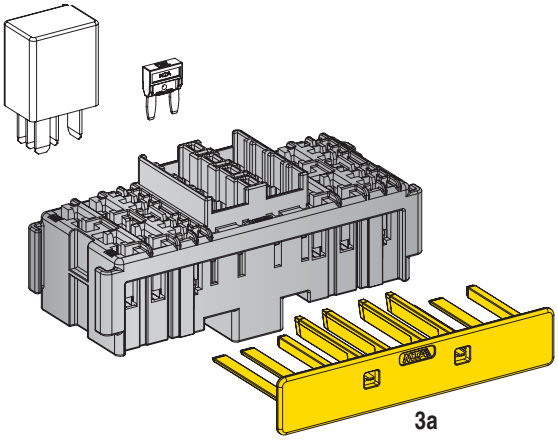

3

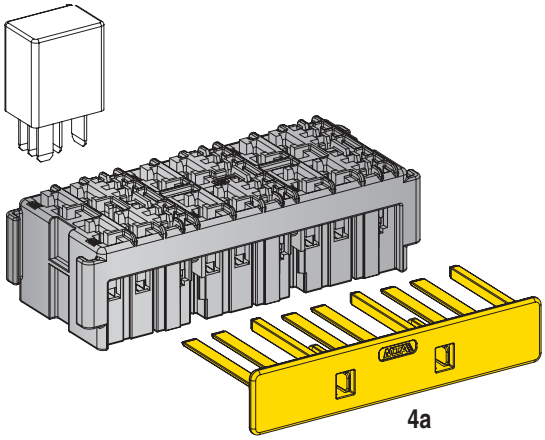

4

IMG	DESCRIPTION	WAY	MATERIAL	COLOUR		P/N BOX WITH S.LOCK	M.O.Q.	P/N BULK	M.O.Q.
1	MINIVAL MODULE	20	PA66 MD25	Grey		0101460	1	0301460	250
2	DIODES/MINIVAL MODULE	20	PA66 MD25	Grey		0101640	1	0301640	230
2a	SECONDARYLOCK		PA66	Yellow				0300793	7000
3	MINIVAL/MICRORELAY MODULE	8 + 4	PA66 MD25	Grey		0101564	1	0301564	132
3a	SECONDARYLOCK		PA66 GF 13	Yellow				0301566	400
4	MICRORELAY MODULE	6	PA66 MD25	Grey		0101484	1	0301484	198
4a	SECONDARYLOCK		PA66 GF 13	Yellow				0301486	400

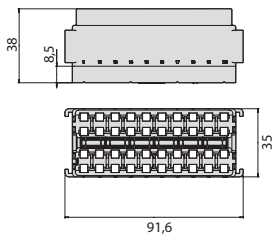

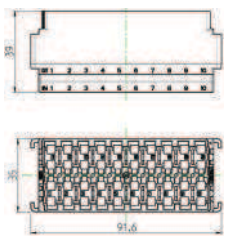

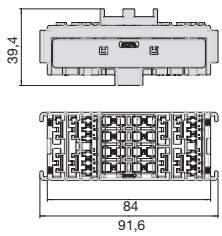

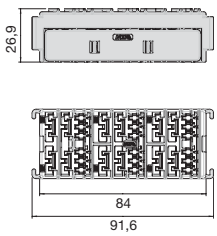

CONNECTIONS AND FIXINGS

IMG	1+2+3	1+2+3	3+4	3+4	1+2+3+4
	F280	F280 BUS-BAR	F480E	F630E	0301630

MODULES

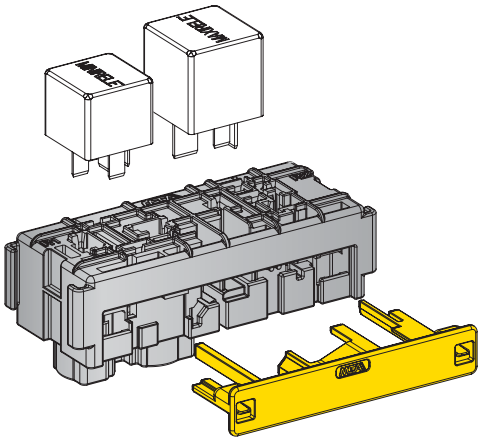

1

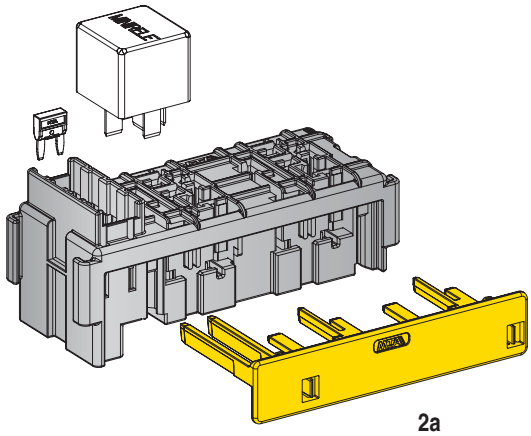

2

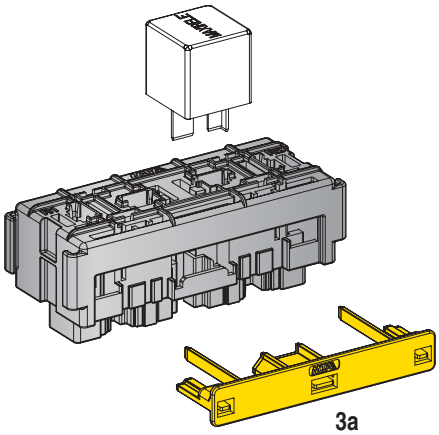

3

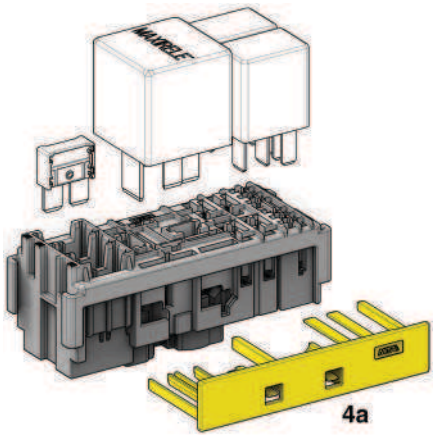

4

IMG	DESCRIPTION	WAY	MATERIAL	COLOUR	P/N BOX WITH S.LOCK	M.O.Q.	P/N BULK	M.O.Q.
1	MINI/MAXI RELAY MODULE	1 + 1	PA66 MD25	Grey	0101494	1	0301494	132
1a	SECONDARYLOCK		PA66 GF 13	Yellow			0301496	600
2	MINIVAL/MINIRELAY MODULE	4 + 2	PA66 MD25	Grey	0101504	1	0301504	132
2a	SECONDARYLOCK		PA66 GF 13	Yellow			0301506	400
3	MAXIRELAY MODULE	2	PA66 MD25	Grey	0101660	1	0301660	132
3a	SECONDARYLOCK		PA66 GF 13	Yellow			0301661	600
4	MAXICOMPACT/MAXI/MICRO RELAY MODULE	3 + 1 + 2	PA66 MD25	Grey	0101695	1	0301695	132
4a	SECONDARYLOCK		PA66 GF 13	Yellow			0301696	400

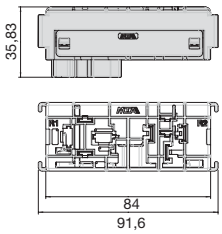

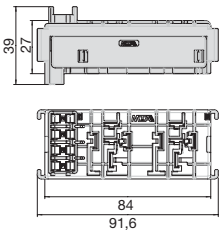

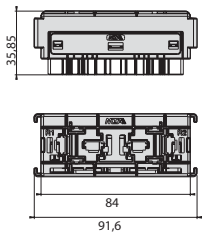

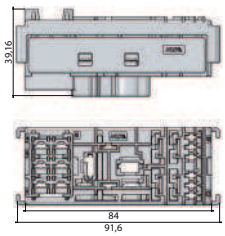

CONNECTIONS AND FIXINGS

IMG	1+3+4	1+2+3+4	2	2	4	1+2+3+4
	F950	F630E	F280	F280 BUS-BAR	F480E	0301630

MODULES

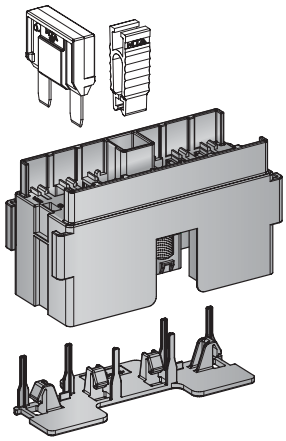

1

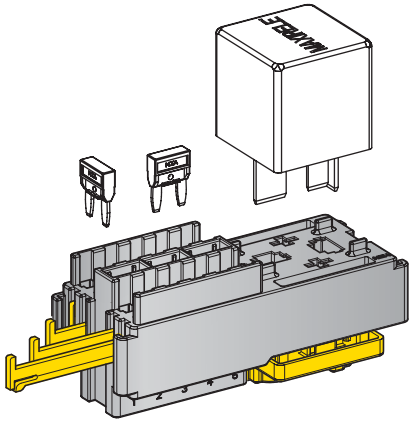

2

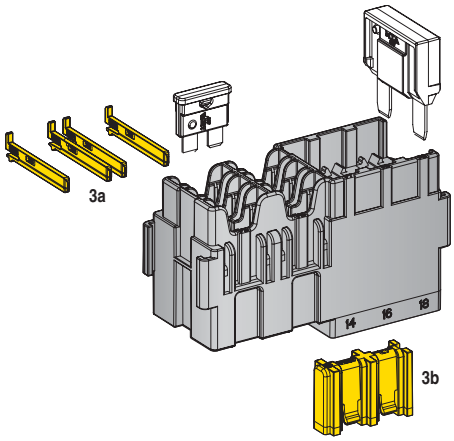

3

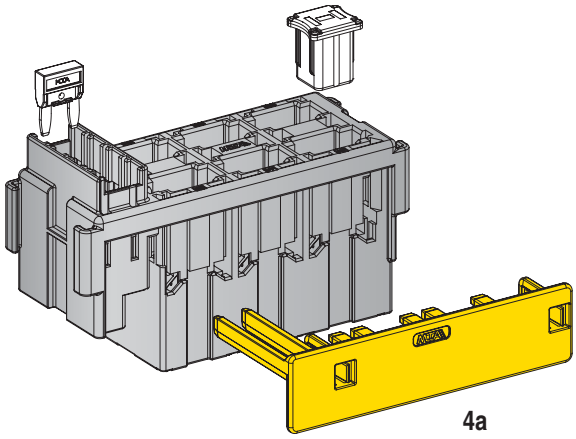

4

IMG	DESCRIPTION	WAY	MATERIAL	COLOUR		P/N BOX WITH S.LOCK	M.O.Q.	P/N BULK	M.O.Q.
1	MAXIVAL MODULE	6	PBT GF20	Grey		0101470	1	0301470	162
2	MINIVAL/MAXIRELAY MODULE	10 +1	PA66 MD25	Grey		0101510	1	0301510	300
3	MAXIVAL/UNIVAL MODULE	3 + 6	PA66 MD25	Grey		0101600	1	0301600	100
3a	SECONDARY LOCK FOR UNIVAL		PA66	Yellow				0301601	6000
3b	SECONDARY LOCK FOR MAXIVAL		PA66	Yellow				0301602	2000
4	MINIVAL/TYPE A1S MODULE	4 + 6	PA66 MD25	Grey		0101690	1	0301690	99
4a	SECONDARY LOCK		PA66 GF13	Yellow				0301691	300

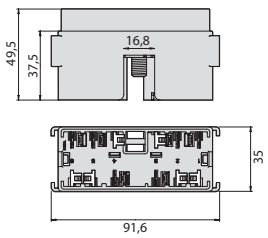

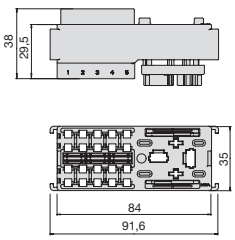

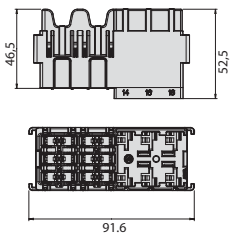

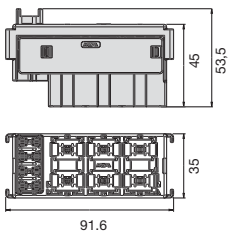

CONNECTIONS AND FIXINGS

IMG	1+3	2	2	2+4	2+4	3	3	4	1+2+3+4
	F800	SPT	F950	F280	F280 BUS-BAR	UNI F630	UNI F630 BUS BAR	M630	0301630

MODULES

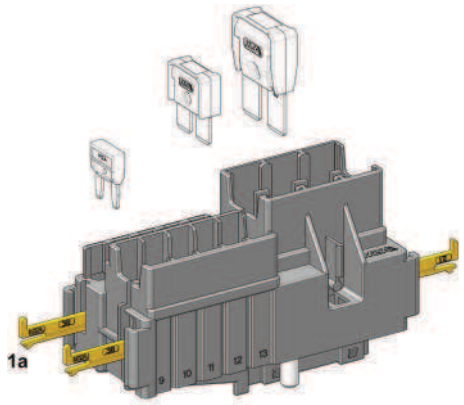

1

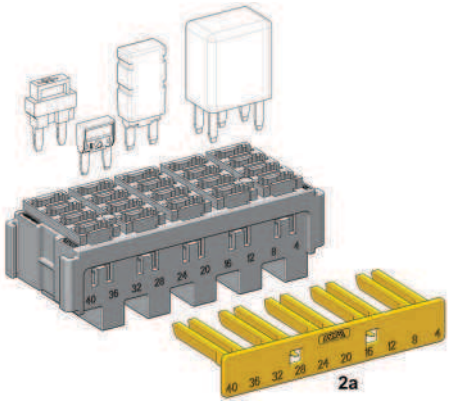

2

IMG	DESCRIPTION	WAY	MATERIAL	COLOUR	P/N BOX WITH S.LOCK	M.O.Q.	P/N BULK	M.O.Q.
1	MINIVAL/MAXICOMPACT/M8C MODULE	5 + 5 + 3	PA66 MD25	Grey	0101697	1	0301697	TBD
1a	SECONDARYLOCK		PA 66	Yellow			0300564	486
2	MINIVAL/CIRCUIT BRAKERS/DIODES MICRO 280 RELAYS	20 6	PA66 MD25	Grey	0101698	1	0301698	160
2a	SECONDARYLOCK		PA66 GF13	Yellow			0301699	330

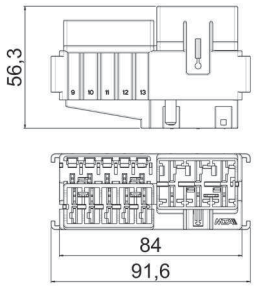

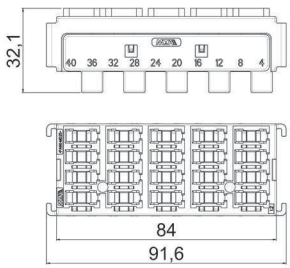

CONNECTIONS AND FIXINGS

IMG	1+2	2	1	1
	F280	F280 BUS-BAR	F63E	F800 WITH CLIP

FOOT PRINT WP MODULE

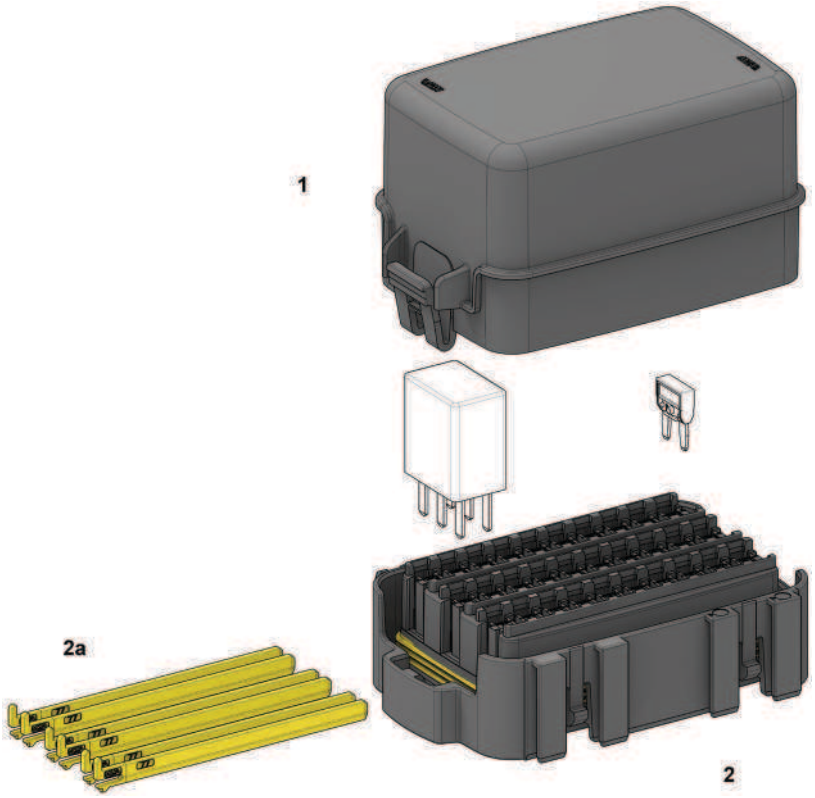

IMG	DESCRIPTION	MATERIAL	COLOUR	P/N BOX WITH S.LOCK	M.O.Q.	P/N BULK	M.O.Q.
1	COVER	PP GF30	Black	0101371	1	0301371	100
2	30 MINIVAL or 10 MICRORELAY WP FOOTPRINT MODULE	PA66 MD25	Black	0101370	1	0301370	60
2a	SECONDARY LOCK	PA 66	Yellow			0301372	1500

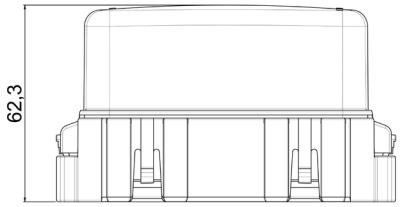

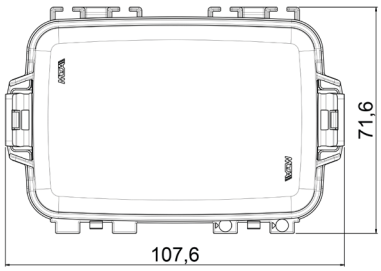

CONNECTIONS AND FIXINGS

F280 WP

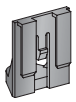

0300690

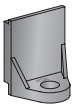

0300691

MINI/MAXIVAL - MAXI/MICRO RELAY WP MODULE

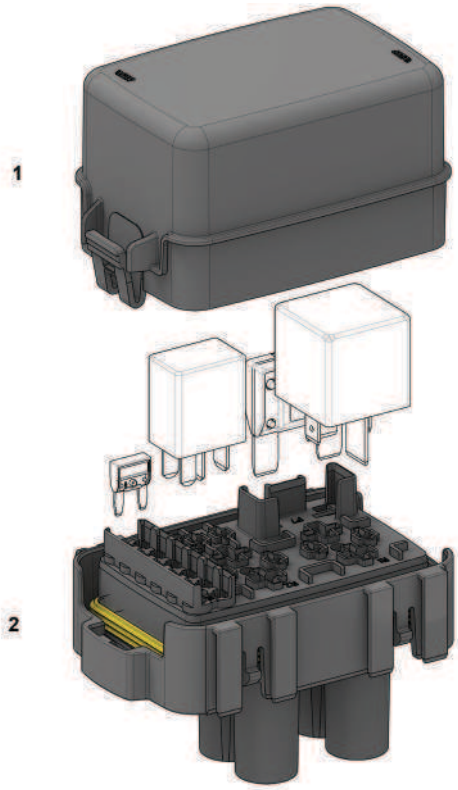

IMG	DESCRIPTION	MATERIAL	COLOUR	P/N BOX	M.O.Q.	P/N BULK	M.O.Q.
1	COVER	PP GF30	■ Black	0101371	1	0301371	100
2	6 MINIVAL + 1 MAXIVAL + 2 MAXIRELAY + 1 MICRORELAY MODULE	PA66 MD25	■ Black	0101491	1	0301491	60

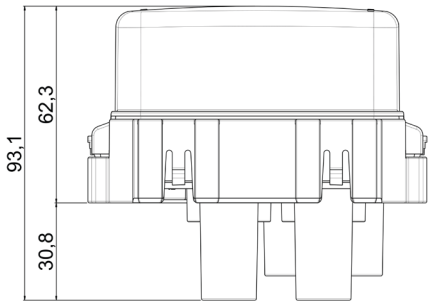

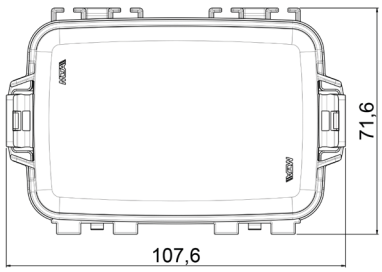

CONNECTIONS AND FIXINGS

F280 WP | F800 WP | JPT WP | SPT WP | MPT WP | 0300690 | 0300691

MINIVAL - MICRO RELAY WP MODULE

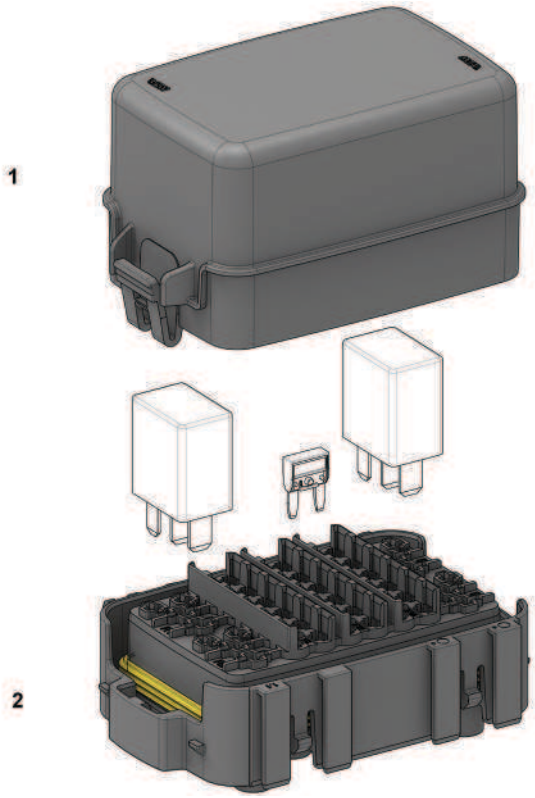

IMG	DESCRIPTION	MATERIAL	COLOUR	P/N BOX	M.O.Q.	P/N BULK	M.O.Q.
1	COVER	PP GF30	■ Black	0101371	1	0301371	100
2	18 MINIVAL + 4 MICRORELAY MODULE	PA66 MD25	■ Black	0101568	1	0301568	48

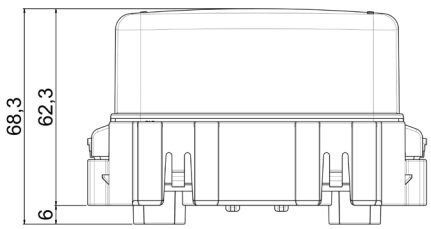

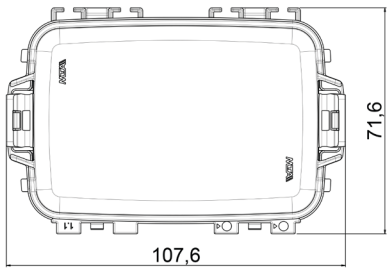

CONNECTIONS AND FIXINGS

F280 WP

JPT WP

SPT WP

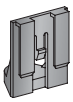
0300690

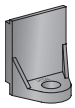
0300691

MINI/MAXIVAL - MINI/MICRO RELAY WP MODULE

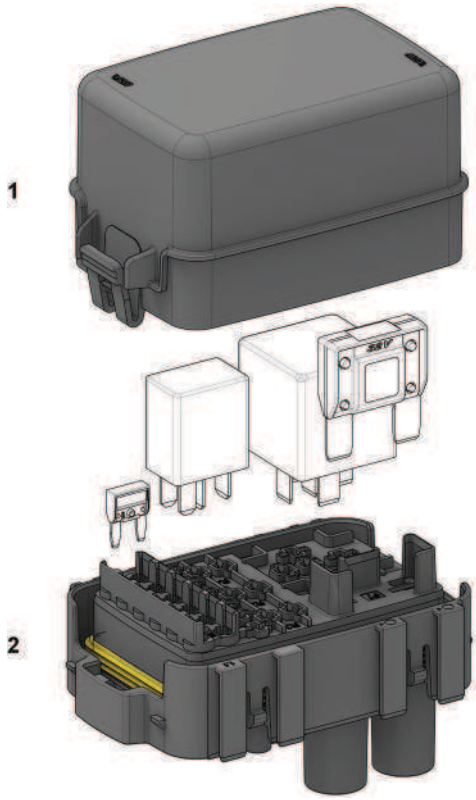

IMG	DESCRIPTION	MATERIAL	COLOUR	P/N BOX	M.O.Q.	P/N BULK	M.O.Q.
1	COVER	PP GF30	■ Black	0101371	1	0301371	100
2	6 MINIVAL + 1 MAXIVAL + 1 MINIRELAY + 3 MICRORELAY	PA66 MD25	■ Black	0101569	1	0301569	60

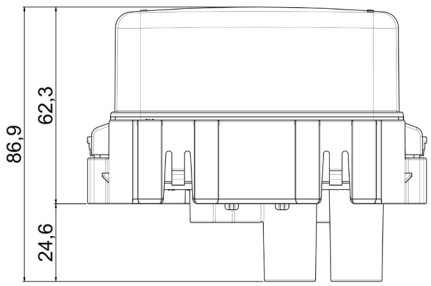

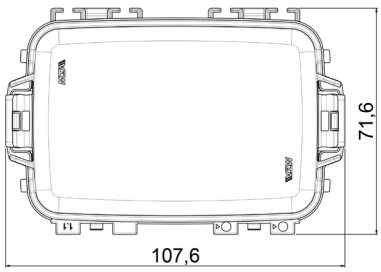

CONNECTIONS AND FIXINGS

F280 WP

F800 WP

JPT WP

SPT WP

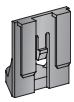
0300690

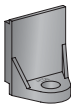
0300691

FUSE BOXES

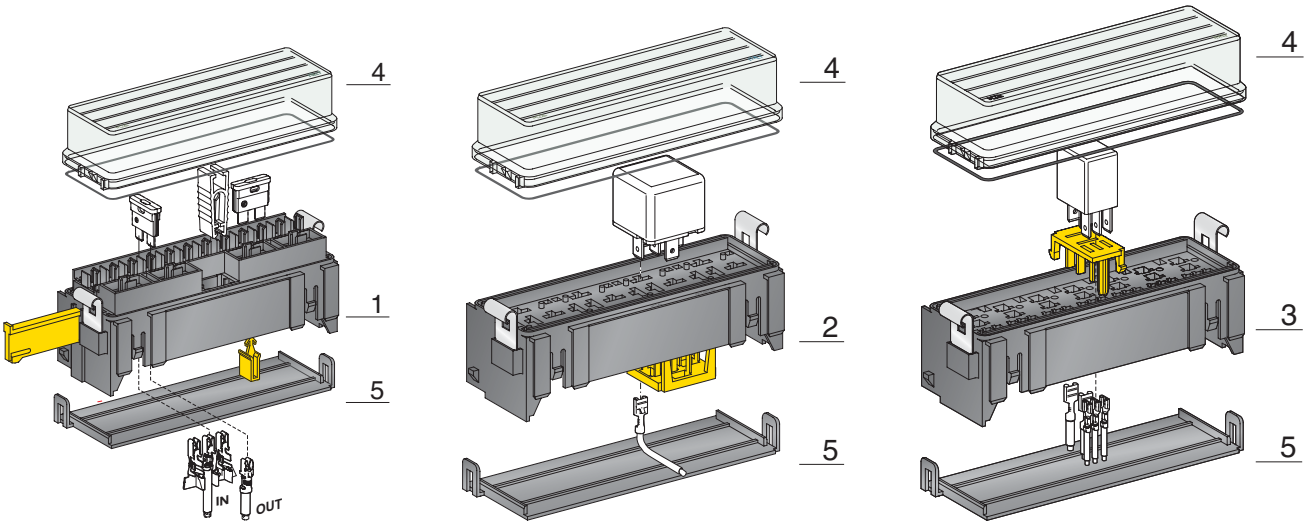

IMG	DESCRIPTION	WAY	MATERIAL	COLOUR	P/N KIT COVER,BRACKETS AND TERMINALS	M.O.Q.	P/N BULK	M.O.Q.
1	UNIVAL HOLDER	16	PA66 GF25	■ Black	0100655	16	0300650	36
2	MINI RELAY HOLDER	4	PA66 GF25	■ Black	0100665	16	0300660	72
3	MICRO RELAY HOLDER	7	PA66 GF25	■ Black	0100705	16	0300700	100
4	COVER WITH GASKET		PC	□ Natural			0300670	72
5	BOTTOM COVER		PA66	■ Black			0300680	72

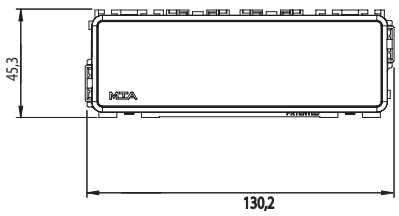

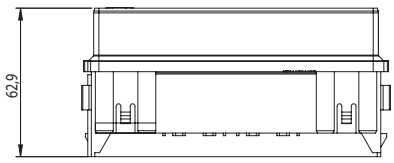

CONNECTIONS AND FIXINGS

IMG	1+2+3	1+2+3	1	1	2	3	3	1+2+3
	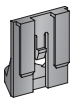		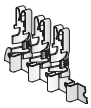		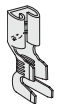		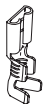	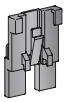
	0300690	0300691	UNI F630 BUS-BAR	UNI F630	FASTON F630 WITH LOCKING NOTCH	FASTON F480 PASSO 5	FASTON F630 THICKNESS 0,35	0300856

CONNECTOR BOX

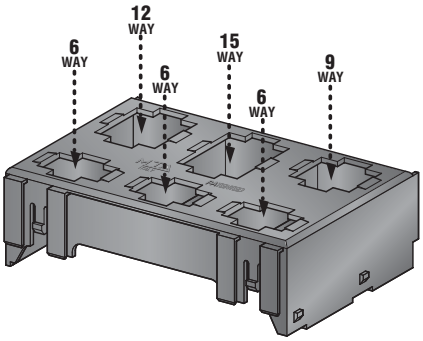

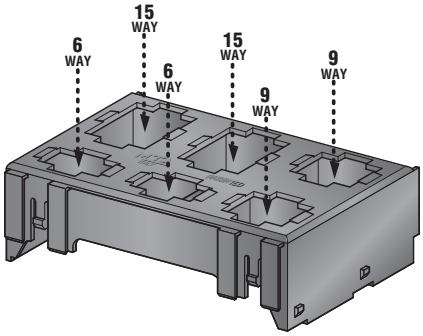

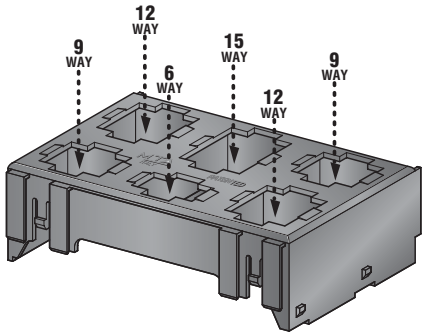

IMG	DESCRIPTION	WAY	MATERIAL	COLOUR		P/N BULK	M.O.Q.
1	CONNECTOR BOX	6	PA66 GF30	■ Black		0300681	125
2	CONNECTOR BOX	6	PA66 GF30	■ Black		0300683	125
3	CONNECTOR BOX	6	PA66 GF30	■ Black		0300684	125

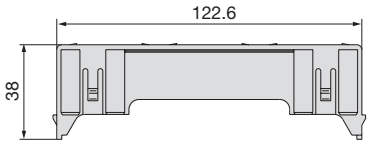

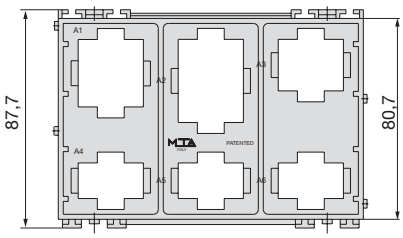

CONNECTIONS AND FIXINGS

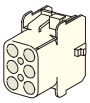

4426120
6VIE/WAY

4426140
9VIE/WAY

4426160
12VIE/WAY

4426180
15VIE/WAY

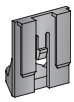

0300690

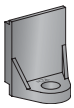

0300691

6-WAY U.P.L.

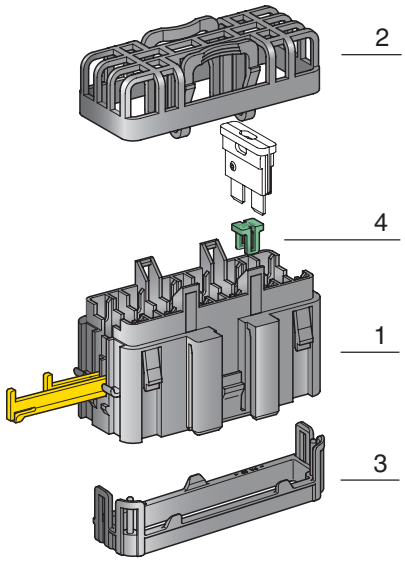

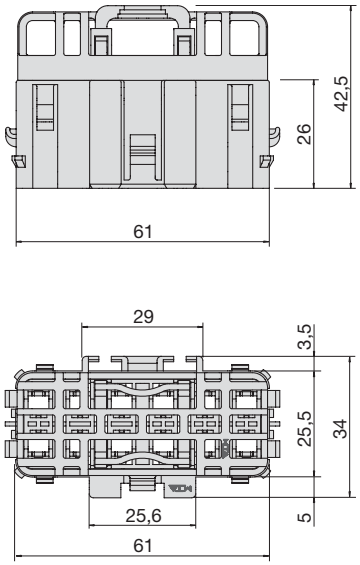

IMG	DESCRIPTION	WAY	MATERIAL	COLOUR	P/N KIT WITH TERMINALS	M.O.Q.	P/N BULK	M.O.Q.
1	HOUSING	6	PA66 GF25	Black			0303006	600
2	COVER		PA66 GF30	Black			0303009	600
3	WIRE'S COVER		PA66	Black			0303008	1000
4	IDENTIFICATION INSERT 3 AMP		PBT GF20	Violet			0303003	500
	IDENTIFICATION INSERT 5 AMP		PBT GF20	Beige			0303005	500
	IDENTIFICATION INSERT 7,5 AMP		PBT GF20	Brown			0303007	500
	IDENTIFICATION INSERT 10 AMP		PBT GF20	Red			0303010	500
	IDENTIFICATION INSERT 15 AMP		PBT GF20	Blue			0303015	500
	IDENTIFICATION INSERT 20 AMP		PBT GF20	Yellow			0303020	500
	IDENTIFICATION INSERT 25 AMP		PBT GF20	White			0303025	500
	IDENTIFICATION INSERT 30 AMP		PBT GF20	Green			0303030	500
	KIT WITH COVER AND TERMINALS AND BRAKETS				0103000	1		

CONNECTIONS AND FIXINGS

0300949

0300851

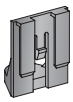
0300690

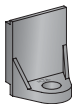
0300691

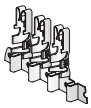
UNI F630 BUS-BAR

UNI F630

SML

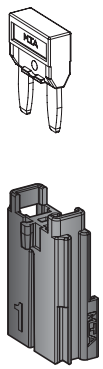

1

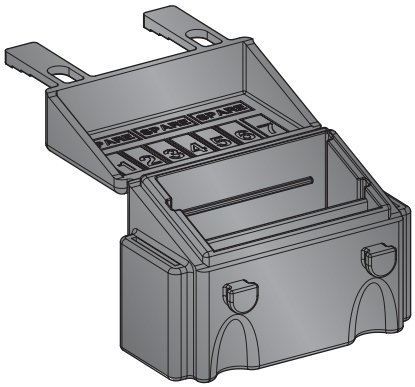

2

IMG	DESCRIPTION	WAY	MATERIAL	COLOUR	P/N KIT WITH TERMINALS	M.O.Q.	P/N BULK	M.O.Q.
1	HOUSING	1	PA66 GF30	■ Black			0301420	2800
2	MODULE FOR MINIVAL	7	EPDM-60	■ Black			0301430	400
	MODULE FOR MINIVAL	7	EPDM-60-D15	■ Black			0301431	400
	KIT WITH TERMINALS				0301435	1		

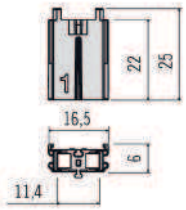

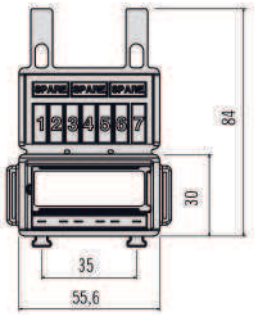

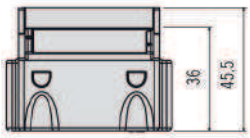

CONNECTIONS AND FIXINGS

F280

AXIAL EXITS

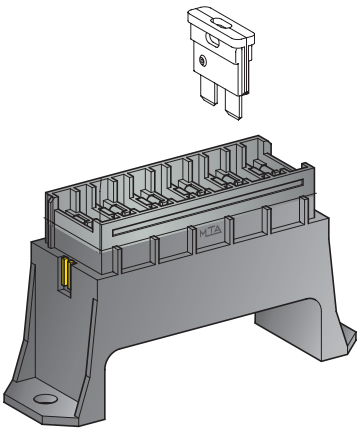

1

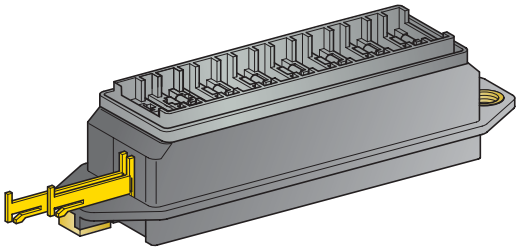

2

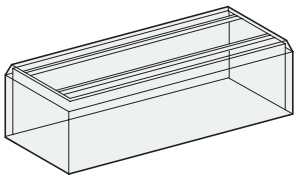

3

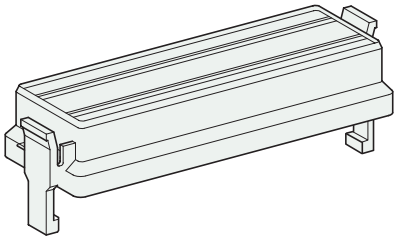

4

IMG	DESCRIPTION	WAY	MATERIAL	COLOUR	P/N KIT WITH COVER AND TERMINALS	M.O.Q.	P/N BULK	M.O.Q.
1	HOUSING WITH TERMINALS	4	PA66 GF30	■ Black	0100540	10	0300540	500
	HOUSING W/OUT TERMINALS	4	PA66 GF30	■ Black			0300541	500
	HOUSING WITH TERMINALS	6	PA66 GF30	■ Black	0100560	10	0300560	500
	HOUSING W/OUT TERMINALS	6	PA66 GF30	■ Black			0300561	500
2	HOUSING WITH TERMINALS	8	PA66 GF30	■ Black	0100580	10	0300580	300
	HOUSING W/OUT TERMINALS	8	PA66 GF30	■ Black			0300581	300
3	COVER	4	PC	□ Natural			0300542	500
	COVER	6	PC	□ Natural			0300562	500
4	COVER WITH GASKET	8	PA 12	□ Natural			0300582	150

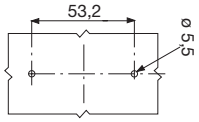

4 WAY

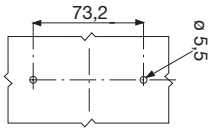

6 WAY

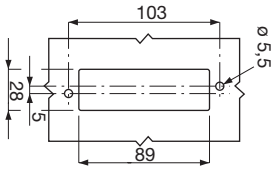

8 WAY

CONNECTIONS AND FIXINGS

IMG	1+2	1+2
	UNI F630	UNI F630

LATERAL EXITS

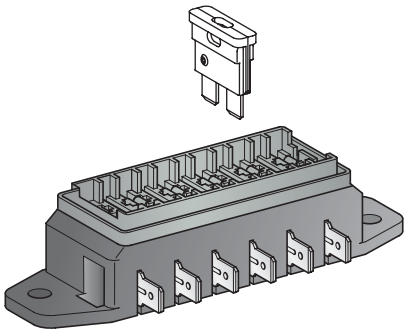

1

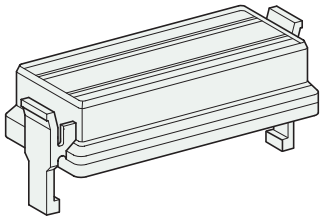

2

IMG	DESCRIPTION	WAY	MATERIAL	COLOUR	P/N KIT WITH COVER	M.O.Q.	P/N BULK	M.O.Q.
1	HOUSING WITH TERMINALS	4	PA66 GF30	■ Black	0100610	10	0300610	500
	HOUSING WITH TERMINALS	6	PA66 GF30	■ Black	0100600	10	0300600	400
	HOUSING WITH TERMINALS	8	PA66 GF30	■ Black	0100590	10	0300590	300
2	COVER WITH GASKET	4	PA12	□ Natural			0300612	500
	COVER WITH GASKET	6	PA12	□ Natural			0300602	100
	COVER WITH GASKET	8	PA12	□ Natural			0300582	150

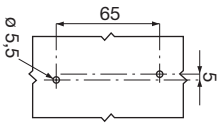

4 WAY

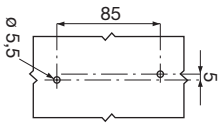

6 WAY

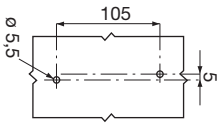

8 WAY

RELAY HOLDER

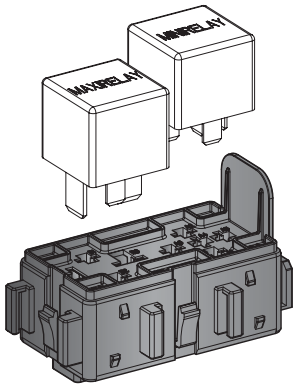

1

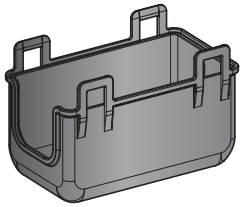

2

IMG	DESCRIPTION	WAY	MATERIAL	COLOUR	P/N BULK	M.O.Q.
1	HOLDER FOR MAXI AND MINI RELAY	2	PBT GF20	■ Black	0302000	240
2	UPPER AND BOTTOM COVER		PP	■ Black	0302001	240

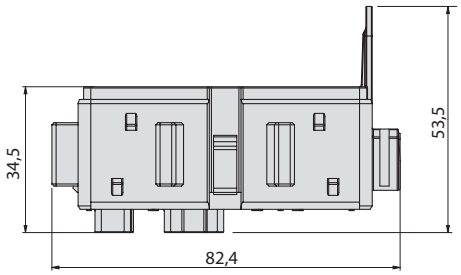

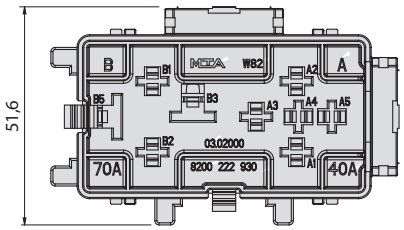

CONNECTIONS AND FIXINGS

L-TYPE F950

NG1 6,3

FUSE/RELAY HOLDERS

MINIVAL®IN-LINE HOLDER

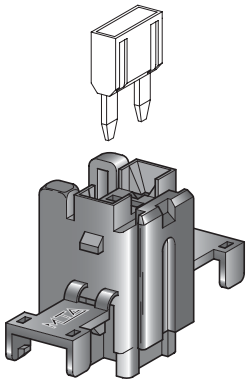

1

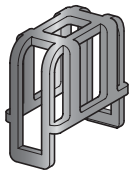

2

IMG	DESCRIPTION	WAY	MATERIAL	COLOUR	P/N BOX	M.O.Q.	P/N BULK	M.O.Q.	P/N BULK	M.O.Q.
1	HOUSING	1	PA66	■ Black	0101400	5	0301400	200	0301410	2000
2	COVER		PA66	■ Black	0100416	5			0300416	2000
	KIT WITH TERMINALS				3050152	20				

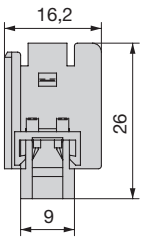

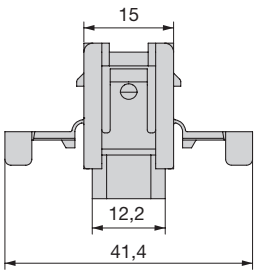

CONNECTIONS AND FIXINGS

0300395
0300398

JPT

SPLASH PROOF UNIVAL®HOLDER

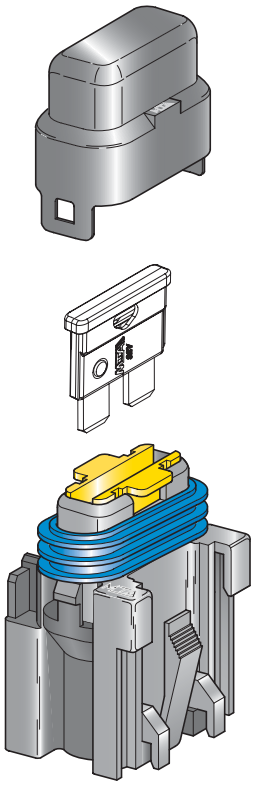

1

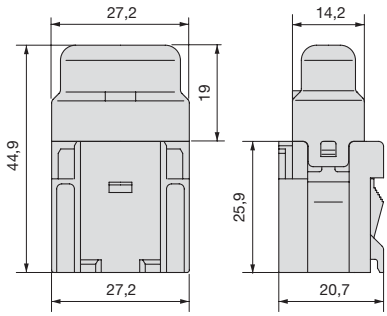

IMG.	DESCRIPTION	WAY	MATERIAL	COLOUR	P/N BOX	M.O.Q.	P/N BOX	M.O.Q.	P/N BULK	M.O.Q.
1	S.P. HOLDER+ COVER + SECONDARYLOCK 1 AMP	1	PA66 PBT GF20	Black Black					0301301	1200
	+ SECONDARYLOCK 5 AMP		PBT GF20	Beige			0302305	100	0301305	1200
	+ SECONDARYLOCK 7,5 A		PBT GF20	Brown					0301307	1200
	+ SECONDARYLOCK 10 AMP		PBT GF20	Red			0302310	100	0301310	1200
	+ SECONDARYLOCK 15 AMP		PBT GF20	Blue			0302315	100	0301315	1200
	+ SECONDARYLOCK 20 AMP		PBT GF20	Yellow	0101320	50	0302320	100	0301320	1200
	+ SECONDARYLOCK 25 AMP		PBT GF20	Natural			0302325	100	0301325	1200
	+ SECONDARYLOCK 30 AMP		PBT GF20	Green			0302330	100	0301330	1200
	KIT WITH TERMINALS GASKET AND FIXING PLATE				3050153	1				

CONNECTIONS AND FIXINGS

0300949

0300851

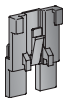

0300856

0300392

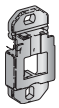

0300440

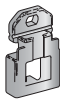

0300430

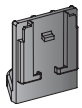

0300698

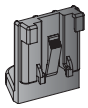

0300697

UNI F630

UNI F630
WITH CLIP

UNIVAL®NKA HOLDER

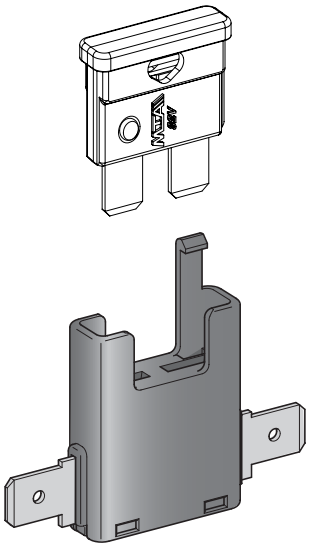

1

IMG	DESCRIPTION	WAY	MATERIAL	COLOUR	P/N BOX	M.O.Q.	P/N BULK	M.O.Q.
1	NKA FUSEHOLDER	1	PA66	■ Black	0100345	50	0300345	2000

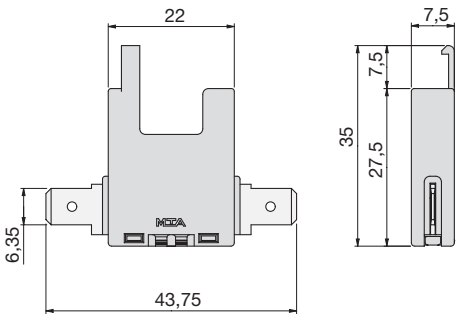

UNIVAL®HOLDER

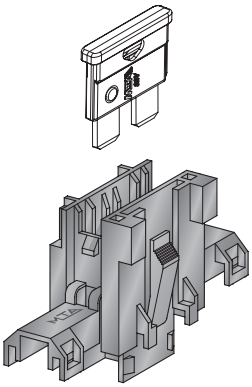

1

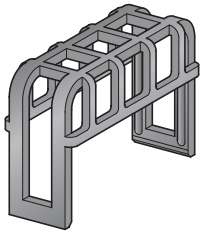

2

IMG	DESCRIPTION	WAY	MATERIAL	COLOUR	P/N BOX	M.O.Q.	P/N BULK	M.O.Q.
1	HOLDER	1	PA66	Black	0100400	125	0300400	500
	HOLDER	1	PA66	Beige			0300401	500
	HOLDER	1	PA66	Brown			0300402	500
	HOLDER	1	PA66	Red			0300403	500
	HOLDER	1	PA66	Blue			0300404	500
	HOLDER	1	PA66	Yellow			0300405	500
	HOLDER	1	PA66	White			0300406	500
	HOLDER	1	PA66	Green			0300407	500
2	COVER		PA66 GF30	Black	0100415	25	0300415	1000

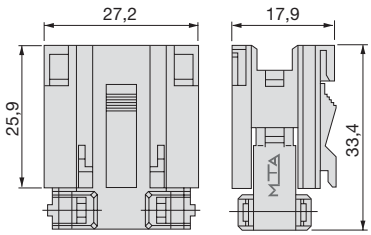

CONNECTIONS AND FIXINGS

0300949

0300851

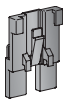

0300856

0300392

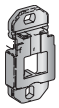

0300440

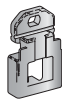

0300430

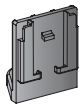

0300698

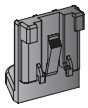

0300697

UNI F630

UNIVAL®HOLDER

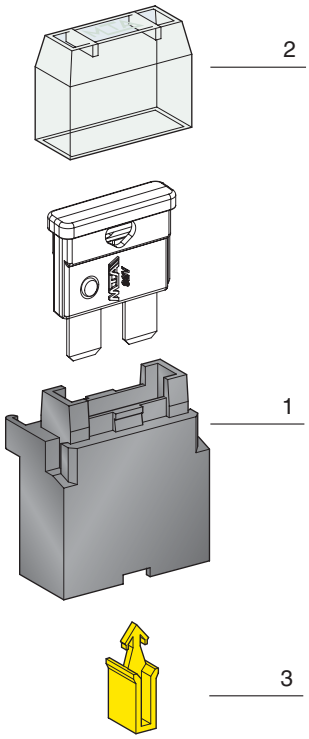

IMG	DESCRIPTION	WAY	MATERIAL	COLOUR	P/N BOX	M.O.Q.	P/N BULK	M.O.Q.
1	HOLDER WITH TERMINALS	1	PA66	■ Black	0100351	250	0300351	1250
	HOLDER WITH SECONDARY LOCK WITHOUT TERMINALS	1	PA66	■ Black			0300354	1000
	HOLDER WITH TERMINALS AND CABLES	1	PA66	■ Black	0100350	25		
2	COVER		PC	□ Clear	0100359	250	0300359	500
3	SECONDARY LOCK		PA66	■ Yellow			0300357	250
	KIT WITH COVER, TERMINALS FIXING PLATE AND EXTRACTOR				0100353 (Blister)	20		

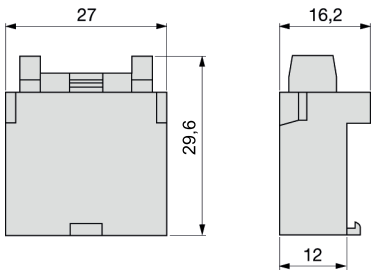

CONNECTIONS AND FIXINGS

0300352

UNI F630

UNI F630

UNIVAL®INSERTABLE HOLDER

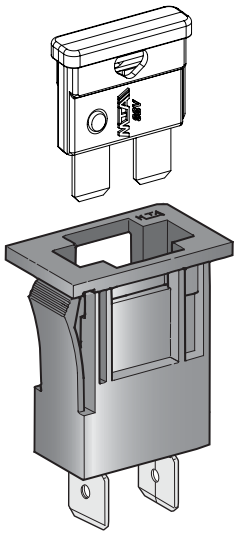

1

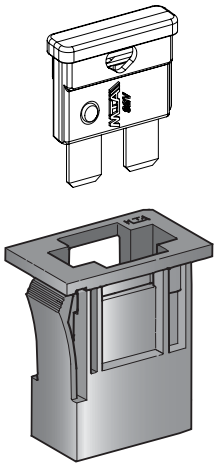

2

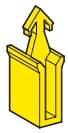

3

IMG	DESCRIPTION	WAY	MATERIAL	COLOUR	P/N BOX	M.O.Q.	P/N BULK	M.O.Q.
1	HOLDER WITH TERMINALS	1	PA66 GF25	■ Black	0100330	25	0300330	500
2	HOLDER WITHOUT TERMINALS	1	PA66 GF25	■ Black			0300331	1000
3	SECONDARYLOCK		PA66	Yellow			0300357	250

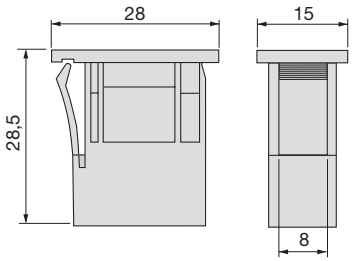

CONNECTIONS AND FIXINGS

IMG	2	2
	UNI F630	UNI F630

UNIVAL®PCB HOLDER

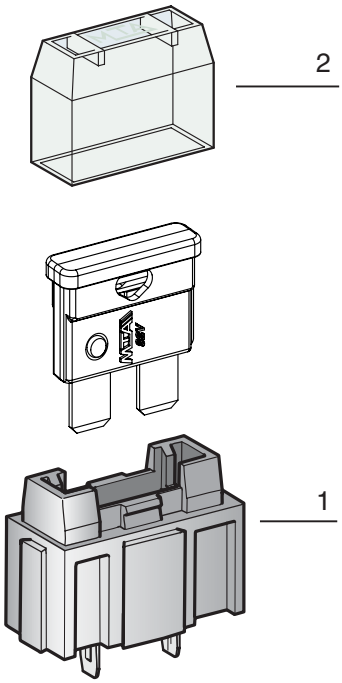

IMG	DESCRIPTION	WAY	MATERIAL	COLOUR	P/N BOX	M.O.Q.	P/N BULK	M.O.Q.
1	HOLDER	1	PA66 GF30	■ Black	0100420	5	0300420	1000
2	COVER	1	PC	□ Natural	0100359	250	0300359	500

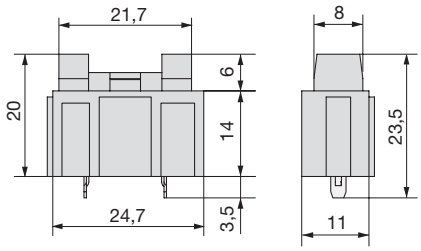

UNIVAL®HOLDER

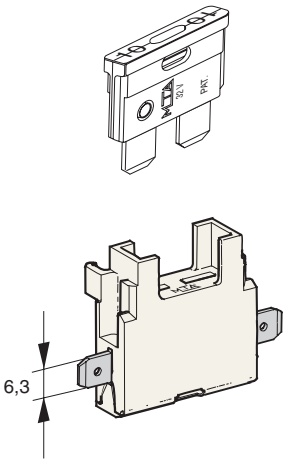

1

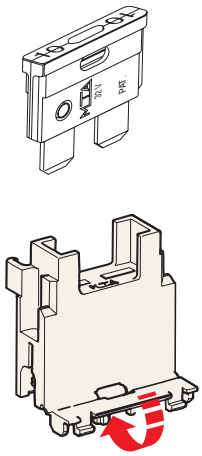

2

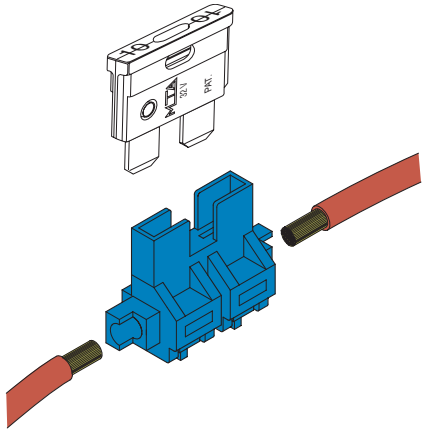

3

IMG	DESCRIPTION	MATERIAL		P/N BOX	M.O.Q.	P/N BULK	M.O.Q.
1	IN LINE FUSEHOLDER WITH TERMINALS	PA66		0100341	250	0300341	1000
2	IN LINE FUSEHOLDER WITHOUT TERMINALS	PA66				0300342	2500
3	QUICK LOCK FUSEHOLDER	PA66		0100334	25		

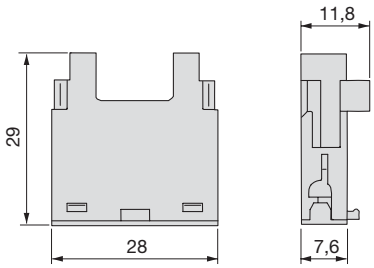

CONNECTIONS AND FIXINGS

IMG 2

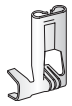

FASTON F630
FLAG

MAXICOMPACT® HOLDER

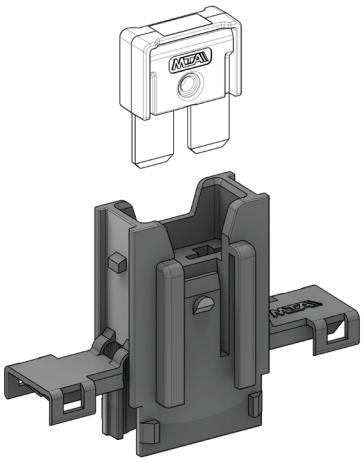

1

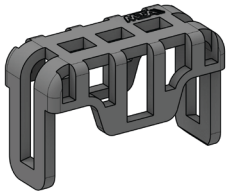

2

IMG	DESCRIPTION	WAY	MATERIAL	COLOUR	P/N BOX	M.O.Q.	P/N BULK	M.O.Q.
1	HOLDER	1	PA66	■ Black	0101881	50	0301881	220
2	COVER	1	PA66	■ Black	0101882	50	0301882	220

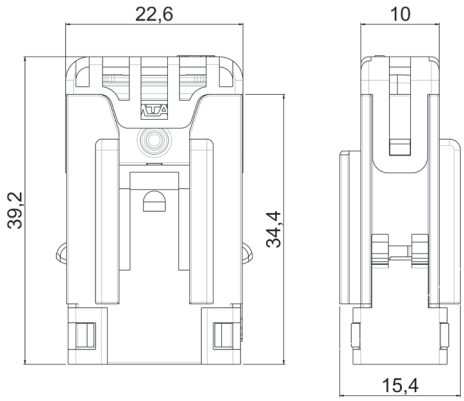

CONNECTIONS AND FIXINGS

F630E

0300395
0300398

M8COMPACT®HOLDER

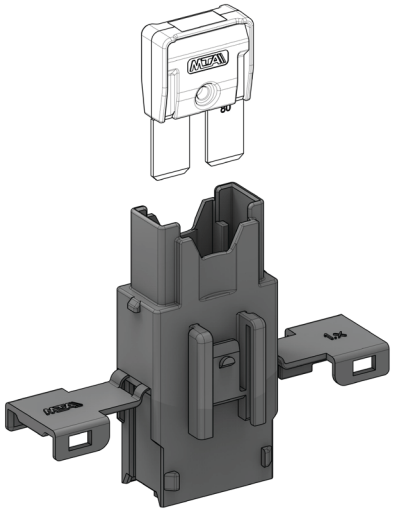

1

2

IMG	DESCRIPTION	WAY	MATERIAL	COLOUR	P/N BOX	M.O.Q.	P/N BULK	M.O.Q.
1	HOLDER	1	PA66	■ Black	0101883	50	0301883	220
2	COVER	1	PA66	■ Black	0101884	50	0301884	220

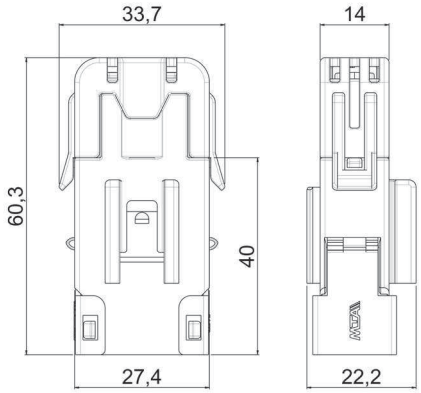

CONNECTIONS AND FIXINGS

F800
WITH CLIP

0300395
0300398

SPLASH PROOF MAXIVAL®HOLDER

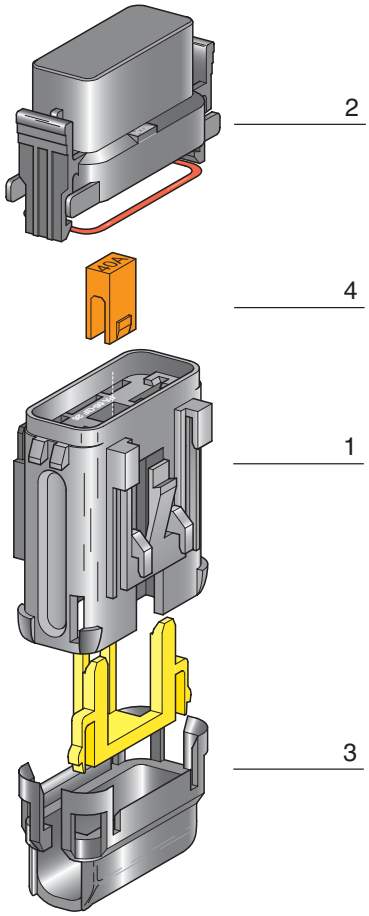

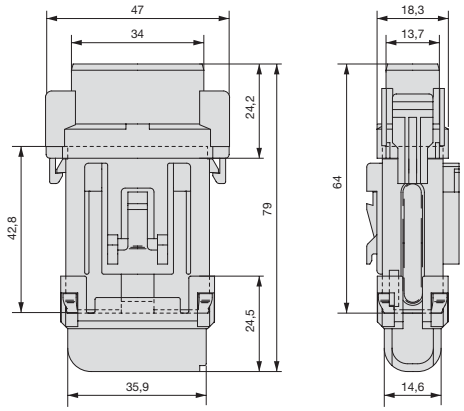

IMG	DESCRIPTION	WAY	MATERIAL	COLOUR	P/N BOX	M.O.Q.	P/N BULK	M.O.Q.
1	HOLDER + SECONDARYLOCK	1	PA66 GF25 PA66 GF30	Black Yellow	0321000	250	0301000	800
2	COVER WITH GASKET		PA66	Black	0321210	250	0301210	1500
3	BOTTOM COVER		PA66	Black	0321200	250	0301200	1500
4	IDENTIFICATION INSERT 30 AMP		PBT GF20	Green			0301030	1500
	IDENTIFICATION INSERT 40 AMP		PBT GF20	Orange			0301040	1500
	IDENTIFICATION INSERT 50 AMP		PBT GF20	Red			0301050	1500
	IDENTIFICATION INSERT 60 AMP		PBT GF20	Blue			0301060	1500
	IDENTIFICATION INSERT 70 AMP		PBT GF20	Beige			0301070	1500
	IDENTIFICATION INSERT 80 AMP		PBT GF20	Natural			0301080	1500
	KIT WITH TERMINALS				0101005	10		

CONNECTIONS AND FIXINGS

0300949

0300851

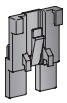
0300856

0300392

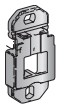
0300440

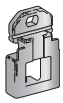
0300430

F800

MAXIVAL®HOLDER

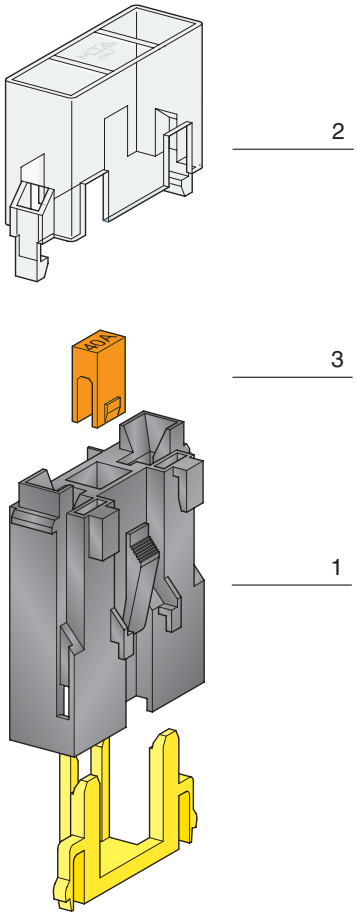

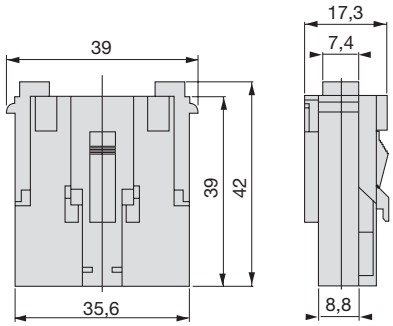

IMG	DESCRIPTION	WAY	MATERIAL	COLOUR	P/N BOX	M.O.Q.	P/N BULK	M.O.Q.
1	HOLDER + SECONDARYLOCK	1	PA66 GF25 PA66 GF30	Black Yellow	0100390	50	0300390	1200
2	COVER		PC	Natural	0100391	10	0300391	1000
3	IDENTIFICATION INSERT 30 AMP		PBT GF20	Green			0301030	1500
	IDENTIFICATION INSERT 40 AMP		PBT GF20	Orange			0301040	1500
	IDENTIFICATION INSERT 50 AMP		PBT GF20	Red			0301050	1500
	IDENTIFICATION INSERT 60 AMP		PBT GF20	Blue			0301060	1500
	IDENTIFICATION INSERT 70 AMP		PBT GF20	Beige			0301070	1500
	IDENTIFICATION INSERT 80 AM		PBT GF20	Natural			0301080	1500
	KIT WITH TERMINALS				3001001	25		

CONNECTIONS AND FIXINGS

0300949

0300851

0300856

0300392

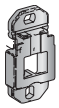
0300440

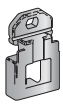
0300430

F800

WATERPROOF FUSE HOLDER

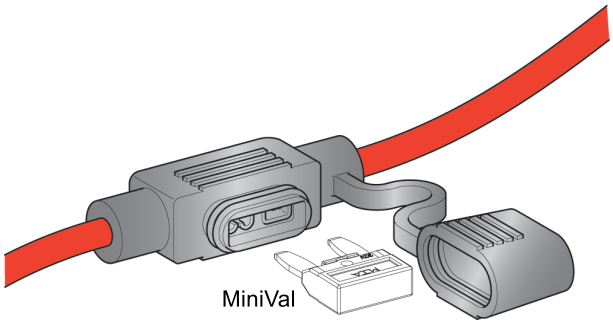

1

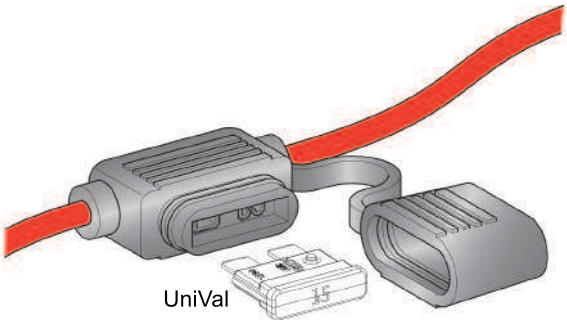

2

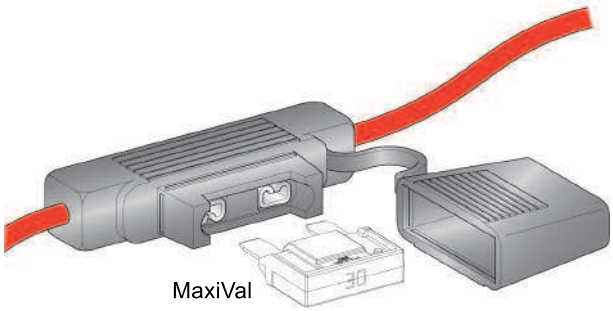

3

IMG	DESCRIPTION	P/N BOX	M.O.Q.	P/N BULK	M.O.Q.
1	WP MINIVAL FUSEHOLDER WITH CABLE 4mm² L = 140 mm	0100335	5		
2	WP UNIVAL FUSEHOLDER WITH CABLE 4mm² L = 138mm	0100336	5	0300336	500
3	WP MAXIVAL FUSEHOLDER WITH CABLE 10mm² L = 132 mm	0100337	1		

MIDIVAL®HOLDER

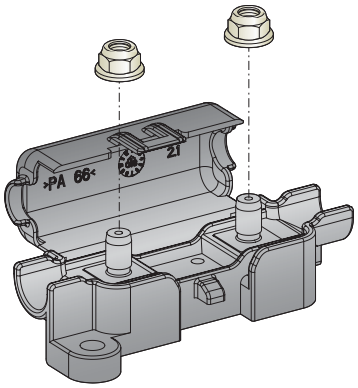

1

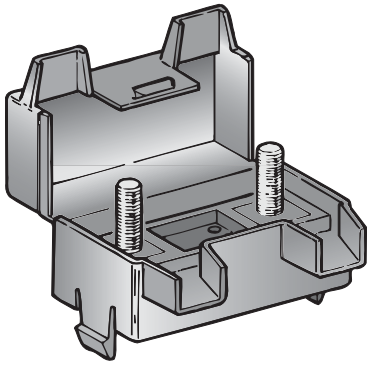

2

IMG	DESCRIPTION	WAY	MATERIAL	COLOUR	P/N BOX	M.O.Q.	P/N BULK	M.O.Q.
1	MIDIVAL HOLDER BOLT TYPE WITH NUTS	1	PA66	■ Black	0100360	75	0300360	200
2	MIDIVAL HOLDER CLIP TYPE WITHOUT NUTS	1	PA66	■ Black			0300370	200
	MIDIVAL HOLDER CLIP TYPE WITH NUTS	1	PA66	■ Black	0100370	5		

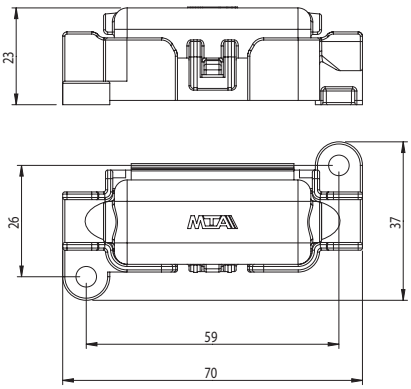

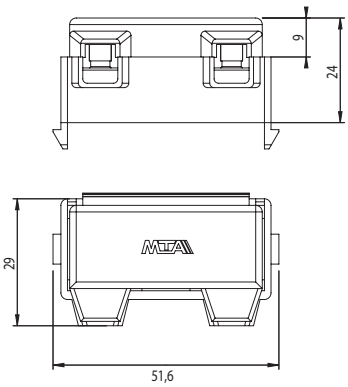

CONNECTIONS AND FIXINGS

MIDI

WATER PROOF MEGAVAL® HOLDER

NEW

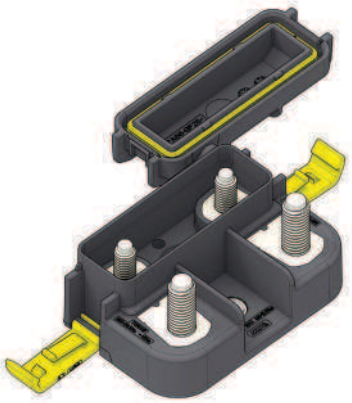

1

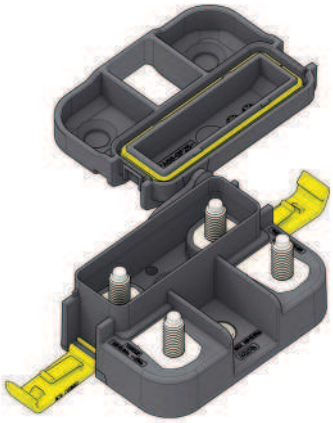

2

IMG	DESCRIPTION	WAY	MATERIAL	COLOUR	P/N BOX	M.O.Q.
1	WP MEGAVAL HOLDER	1	PA66 GF25	■ Black	0301502	24
2	WP MEGAVAL HOLDER WITH EXTENDED COVER	1	PA66 GF25	■ Black	0301152	24

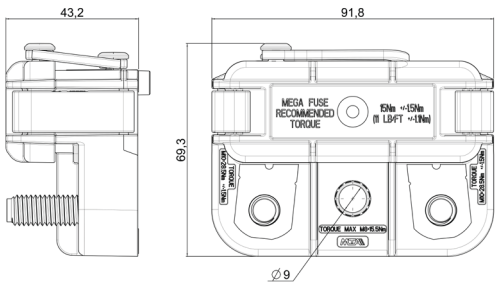

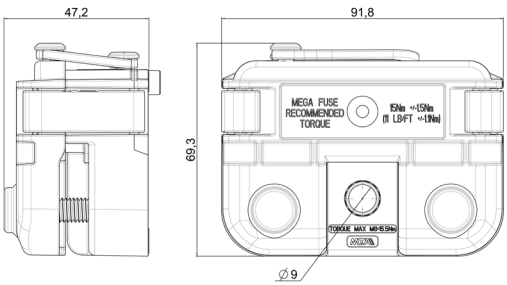

CONNECTIONS AND FIXINGS

TUBOLAR

MEGAVAL®HOLDER

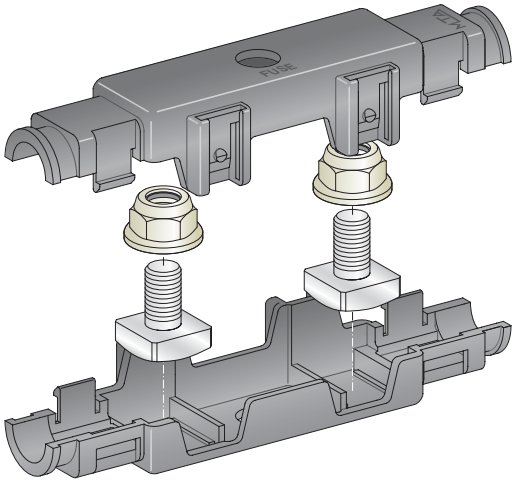

1

IMG	DESCRIPTION	WAY	MATERIAL	COLOUR		P/N	M.O.Q.
1	MEGAVAL HOLDER	1	PA66 GF30	■ Black		0300380	50
	KIT WITH TERMINALS					0100380	10

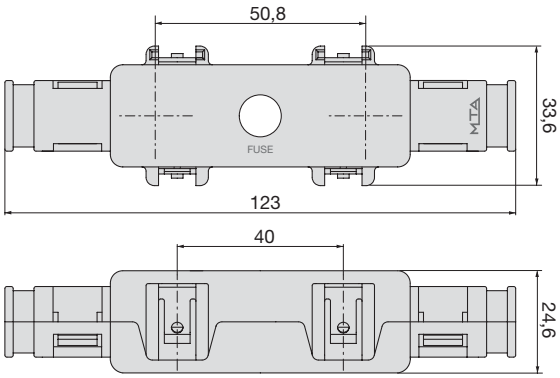

CONNECTIONS AND FIXINGS

0300395
0300398

MEGA L34

MIDIVAL®-MEGACOMPACT®-MEGAVAL®HOLDER

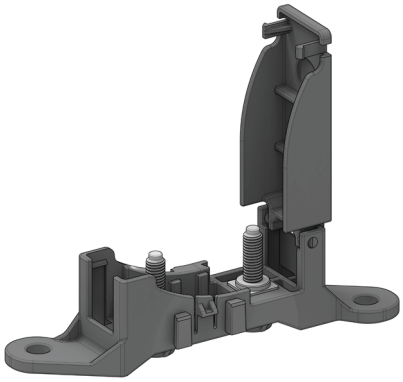

1

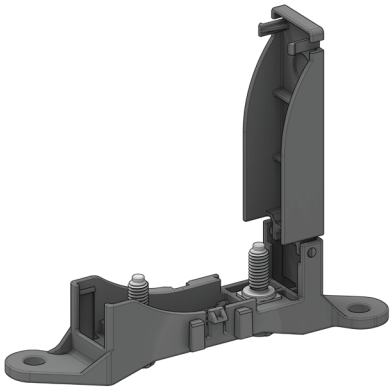

2

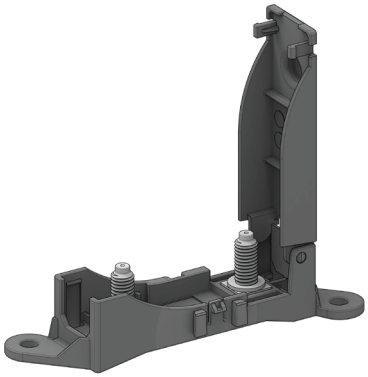

3

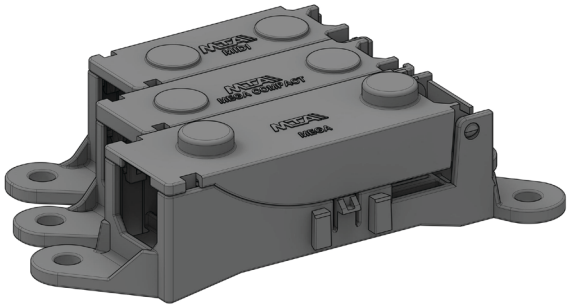

EXAMPLE OF A MULTIPLE FUSE BLOCK

IMG	DESCRIPTION	WAY	MATERIAL	COLOUR	P/N BOX	M.O.Q.	P/N BULK	M.O.Q.
1	MIDIVAL HOLDER	1	PA66 GF30	■ Black	0101499	20	0301499	200
2	MEGACOMPACT HOLDER	1	PA66 GF30	■ Black	0101497	20	0301497	150
3	MEGAVAL HOLDER	1	PA66 GF30	■ Black	0101498	20	0301498	100

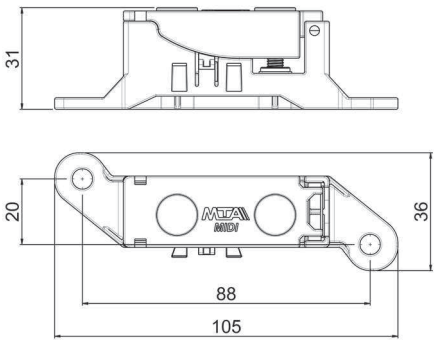

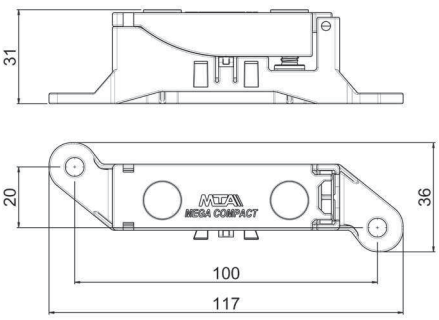

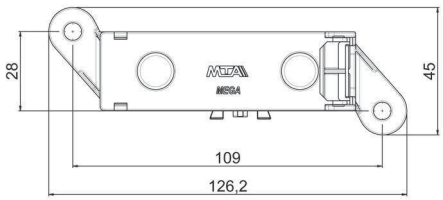

CONNECTIONS AND FIXINGS

IMG	1	2	2+3	3	3
	MIDI M5	RING STDL37	TUBOLAR	MEGA M8 POLA	MEGA M8 POLB

BUS-BAR

NEW

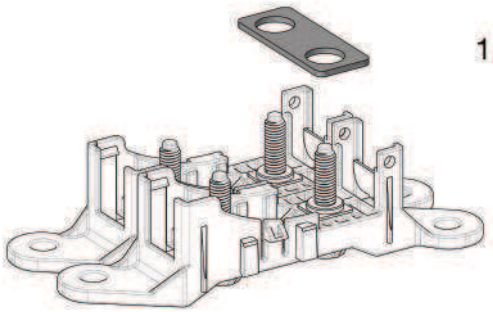

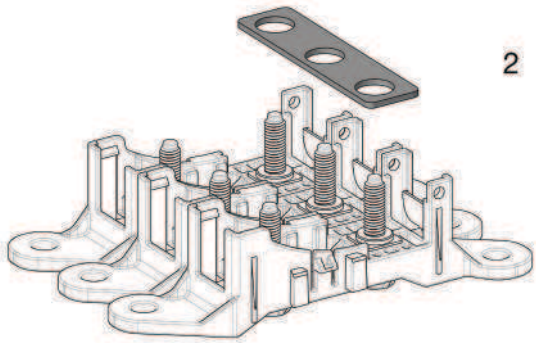

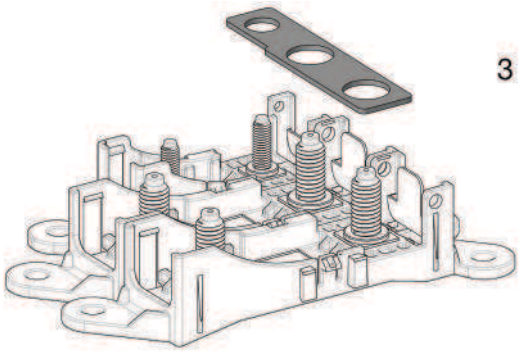

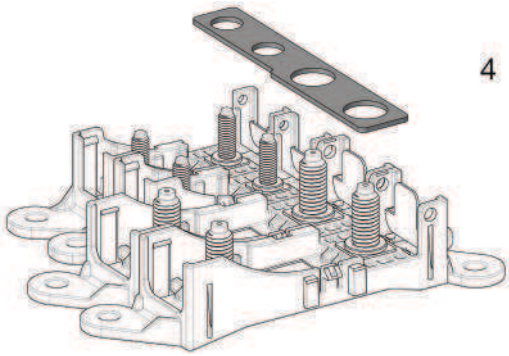

IMG	DESCRIPTION	MATERIAL	MATERIAL THICKNESS mm	P/N	M.O.Q.
	2 WAY BUS-BAR MIDIVAL	Cu-Sn	1,5	0301509	TBD
	3 WAY BUS-BAR MIDIVAL	Cu-Sn	1,5	0301508	TBD
	3 WAY BUS-BAR 1 MIDIVAL / 2 MEGAVAL	Cu-Sn	1,5	0301511	TBD
	4 WAY BUS-BAR 2 MIDIVAL / 2 MEGAVAL	Cu-Sn	1,5	0301512	TBD

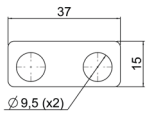

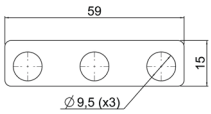

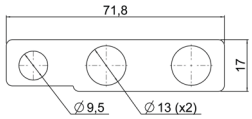

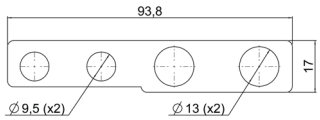

GLASS & CONTINENTAL FUSE HOLDER

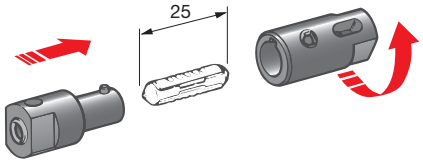

1

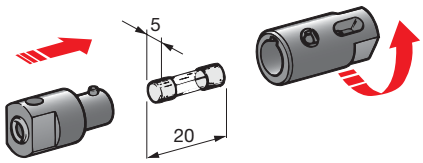

2

IMG	DESCRIPTION	COLOUR	CABLE	P/N BOX	M.O.Q.	P/N BULK	M.O.Q.
1	FUSEHOLDER WITH BLACK CONTINENTAL FUSE 8A	■ Black	0.25÷2	0100300	25	0300300	1000
2	FUSEHOLDER WITH GLASS FUSE 2A - 5X20 mm	■ Black	0.25÷2	0100306	25	0300306	1000

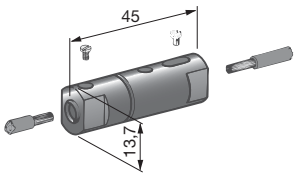

1

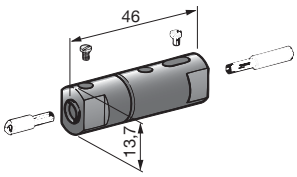

2

RELAY HOLDER

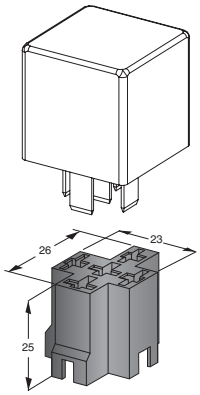

1

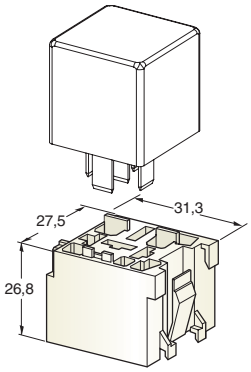

2

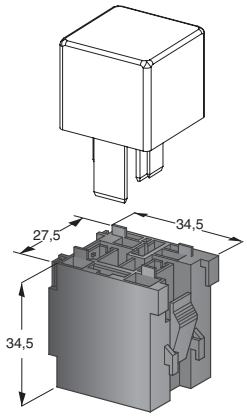

3

IMG	DESCRIPTION	MATERIAL	COLOUR	P/N BOX	M.O.Q.	P/N BULK	M.O.Q.
1	MINI RELAY HOLDER	PA	■ Black	4410246	50		
2	MINI RELAY HOLDER	PA	□ Neutral	4410245	50	4510245	500
	KIT HOLDER + TERMINALS + FIXING PLATE			3050135	1		
3	MAXI RELAY HOLDER	PA	■ Black	4410247	50	4510247	250
	KIT HOLDER + TERMINALS + FIXING PLATE			3050136	1		

CONNECTIONS AND FIXINGS

IMG	1	2+3	2+3	2+3	2	3	3
			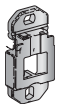	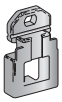			
	F630	01.00392	01.00440	01.00430	F630 W/LOCK.NOTCH	ANTISF F630	FASTON F950 W/LOCK.NOTCH

ADAPTERS & FIXING PLATES

ADAPTERS

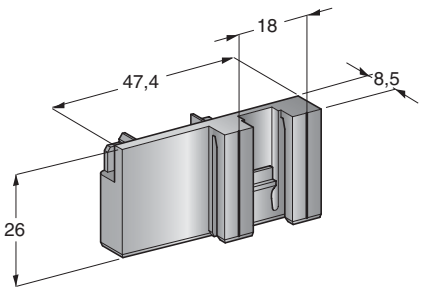

1

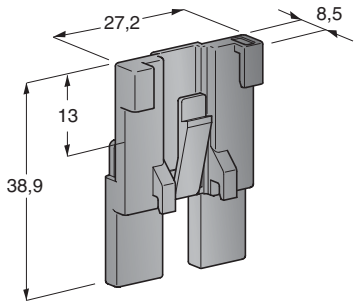

2

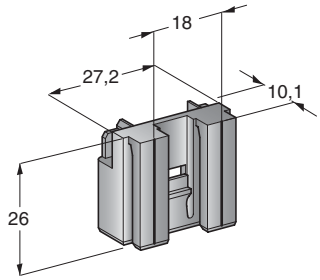

3

IMG	DESCRIPTION	MATERIAL	COLOUR		P/N BULK	M.O.Q.
1	ADAPTER	PA66 GF25	■ Black		0300851	1000
2	ADAPTER	PA66 GF25	■ Black		0300856	1500
3	ADAPTER	PA66 GF25	■ Black		0300949	1500

FIXING PLATES

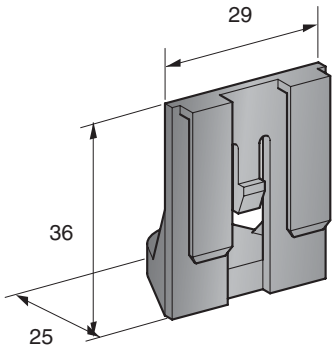

1

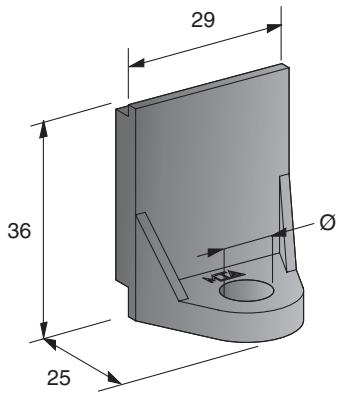

2

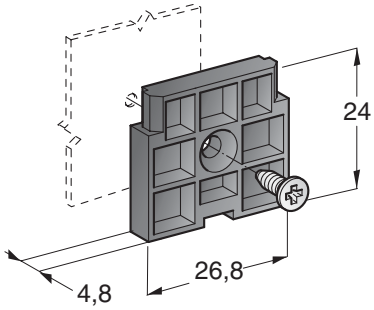

3

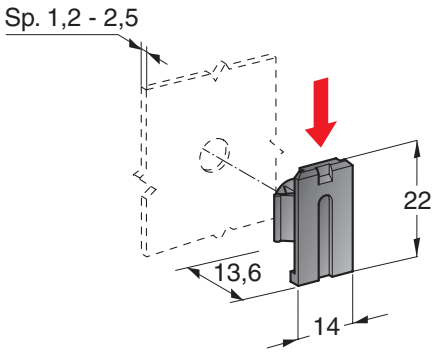

4

IMG	DESCRIPTION	ø mm	MATERIAL	COLOUR	P/N BOX	M.O.Q.	P/N BULK	M.O.Q.
1	MOUNTING BRACKET MALE	8,5	PA66	■ Black			0300690	100
2	MOUNTING BRACKET FEMALE	8,5	PA66	■ Black			0300691	100
3	FIXING PLATE WITH 1 SCREW	3,6	PP GF30	■ Black	0100352	250	0300352	1000
4	FIXING PLATE BY PRESSURE	6,5	PA66	■ Black			0300395	1000
	FIXING PLATE BY PRESSURE	8,0	PA66	■ Black			0300398	1000

FIXING PLATES

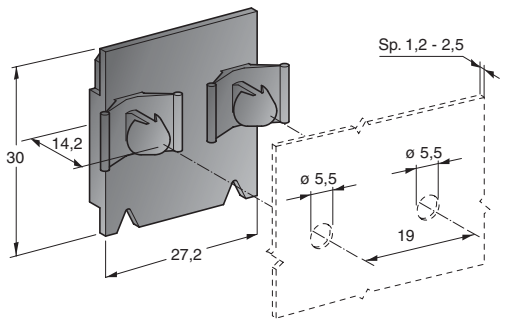

1

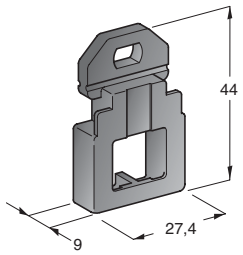

2

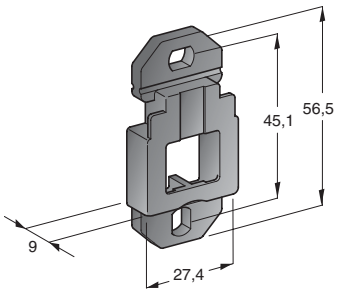

3

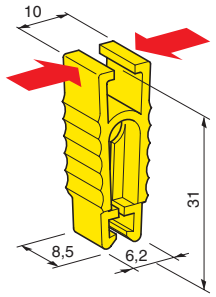

4

IMG	DESCRIPTION	SCREW ø mm	MATERIAL	COLOUR	P/N BOX	M.O.Q.	P/N BULK	M.O.Q.
1	FIXING PLATE	5,5	PA66	■ Black	0100392	100	0300392	1000
2	FIXING PLATE	M 5	PA66	■ Black	0100430	100	0300430	1000
3	FIXING PLATE	M 5	PA66	■ Black	0100440	100	0300440	250
4	EXTRACTOR FOR BLADE FUSE		PP	Yellow	0100358	250	0300358	3000

FIXING PLATES

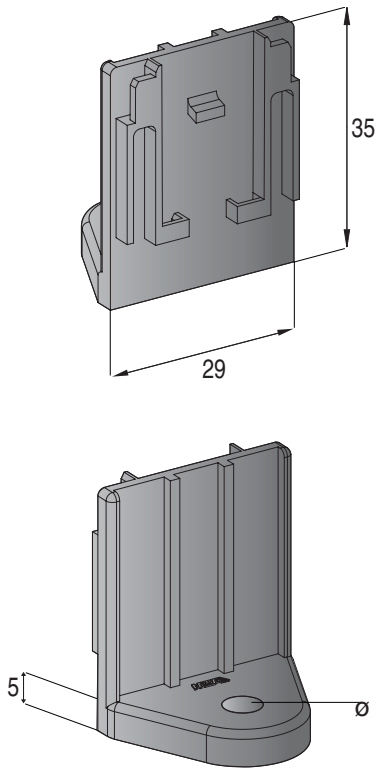

1

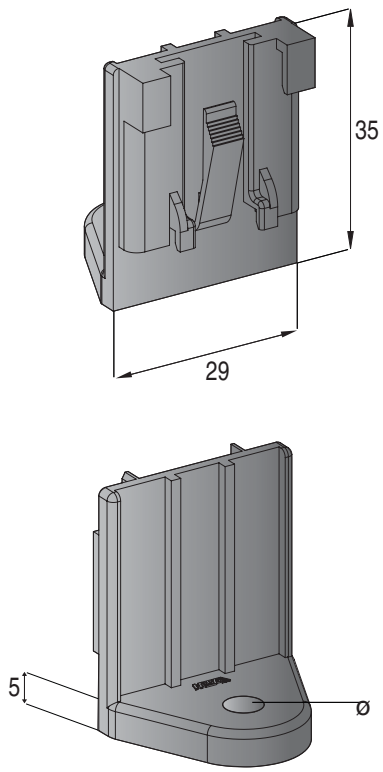

2

IMG	DESCRIPTION	ø mm	MATERIAL	COLOUR		P/N BULK	M.O.Q.
1	MOUNTING BRACKET FEMALE	5,5	PA66	■ Black		0300698	100
2	MOUNTING BRACKET MALE	5,5	PA66	■ Black		0300697	100

CONNECTORS

1-WAY POWER

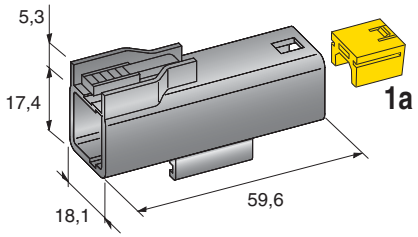

1

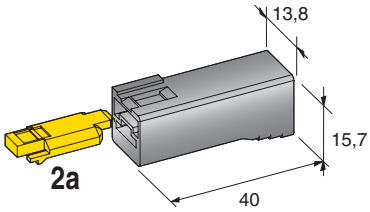

2

IMG	DESCRIPTION	WAY	MATERIAL	COLOUR	P/N BOX WITH S.LOCK	M.O.Q.	P/N BULK	M.O.Q.
1	MALE HOLDER	1	PA66 GF25	Black	4440200	20	4540205	1200
2	FEMALE HOLDER	1	PA66 GF25	Black	4440100	20	4540105	2400
1a	SECONDARY LOCK		PA66	Yellow			4545200	2400
2a	SECONDARY LOCK		PA66	Yellow			4545100	4800

CONNECTIONS AND FIXINGS

IMG	1	2	1
			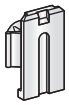
	M800	F800	0300395 0300398

1-WAY POWER

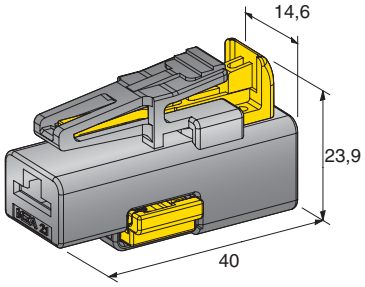

1

IMG	DESCRIPTION	WAY	MATERIAL	COLOUR	P/N BULK	M.O.Q.
1	FEMALE HOLDER WITH SECONDARY LOCK AND CPA	1	PA66 GF30	■ Black	4540150	700

CONNECTIONS AND FIXINGS

F800

2-WAY POWER

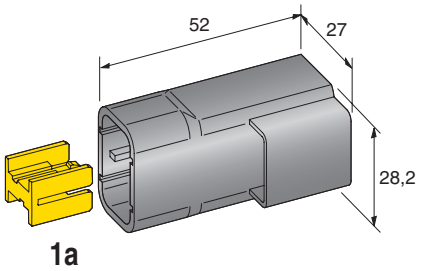

1

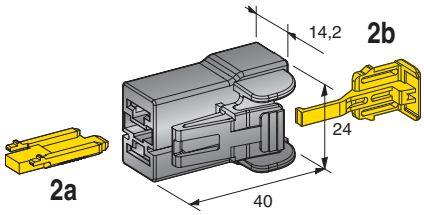

2

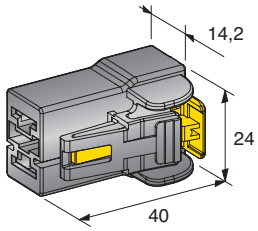

3

IMG	DESCRIPTION	WAY	MATERIAL	COLOUR	P/N BOX WITH S.LOCK	M.O.Q.	P/N BULK	M.O.Q.
1	MALE HOLDER	2	PA66 GF30	Black	4440400	10	4540405	1200
2	FEMALE HOLDER	2	PA66 GF30	Black	4440300	10	4540305	1200
3	FEMALE HOLDER WITH CPA	2	PA66 GF30	Black			4540302	1200
1a	SECONDARY LOCK		PA66 GF30	Yellow			4545400	1200
2a	SECONDARY LOCK		PA66	Yellow			4545100	4800
2b	CPA		PA66 GF30	Yellow			4545300	2400

CONNECTIONS AND FIXINGS

IMG	1	2+3	1
			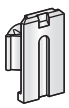
	M800	F800	0300395 0300398

2-WAY POWER

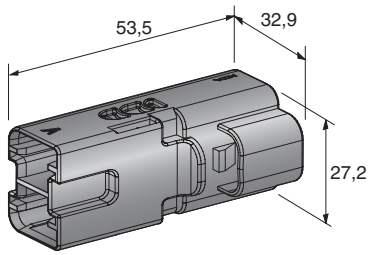

1

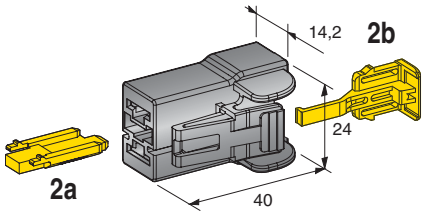

2

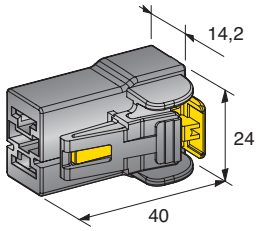

3

IMG	DESCRIPTION	WAY	MATERIAL	COLOUR	P/N BOX WITH S.LOCK	M.O.Q.	P/N BULK	M.O.Q.
1	MALE HOLDER POLARIZED	2	PA66 GF30	Blue			4540410	1200
	MALE HOLDER POLARIZED	2	PA66 GF30	Grey			4540420	1200
	MALE HOLDER POLARIZED	2	PA66 GF30	Green			4540430	1000
2	FEMALE HOLDER POLARIZED	2	PA66 GF30	Blue	4440310	10	4540315	1200
	FEMALE HOLDER POLARIZED	2	PA66 GF30	Grey	4440340	10	4540345	1200
	FEMALE HOLDER POLARIZED	2	PA66 GF30	Green			4540325	1200
	FEMALE HOLDER POLARIZED	2	PA66 GF30	Brown			4540335	1200
3	FEMALE HOLDER POLARIZED WITH CPA	2	PA66 GF30	Blue			4540312	1200
2a	SECONDARY LOCK	2	PA66	Yellow			4545100	4800
2b	CPA	2	PA66 GF30	Yellow			4545300	2400

CONNECTIONS AND FIXINGS

IMG	1	2+3	1
			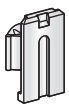
	M800	F800	0300395 0300398

2-WAY POWER

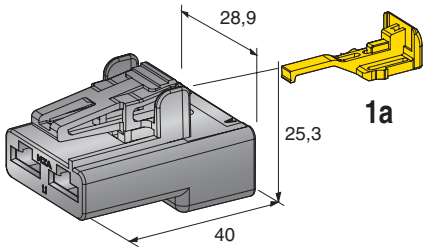

1

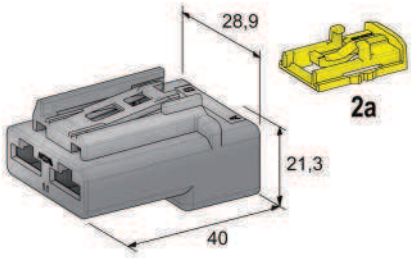

2

IMG	DESCRIPTION	WAY	MATERIAL	COLOUR		P/N BULK	M.O.Q.
1	FEMALE HOLDER POLARIZED	2	PA66 GF13	Blue		4540500	600
	FEMALE HOLDER POLARIZED	2	PA66 GF13	Green		4540501	600
1a	CPA		PA66 GF30	Yellow		4545300	2400
2	FEMALE HOLDER POLARIZED	2	PA66 GF13 HB	Blue		4540502	600
	FEMALE HOLDER POLARIZED	2	PA66 GF13 HB	Green		4540503	600
2a	CPA		PA66 GF30	Yellow		4540303	600

CONNECTIONS AND FIXINGS

IMG 1+2

F800

3-WAY POWER

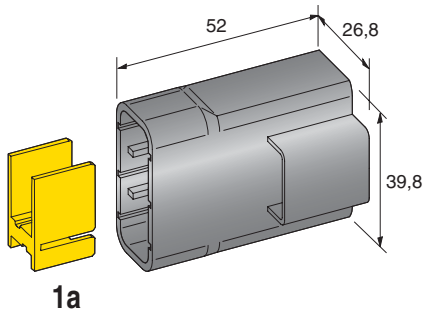

1

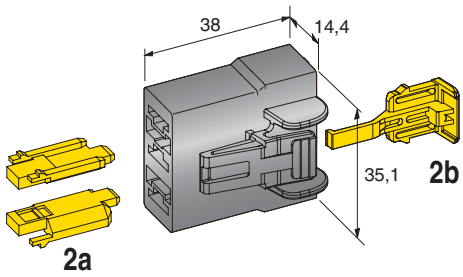

2

IMG	DESCRIPTION	WAY	MATERIAL	COLOUR	P/N BOX WITH S.LOCK	M.O.Q.	P/N BULK	M.O.Q.
1	MALE HOLDER	3	PA66 GF25	Black	4440800	10	4540805	1200
	MALE HOLDER POLARIZED	3	PA66 GF25	Blue			4540815	600
2	FEMALE HOLDER	3	PA66 GF30	Black	4440700	10	4540705	1200
	FEMALE HOLDER POLARIZED	3	PA66 GF30	Blue			4540715	1200
	FEMALE HOLDER POLARIZED	3	PA66 GF30	Grey			4540735	1200
1a	SECONDARY LOCK		PA66 GF30	Yellow			4545800	1200
2a	SECONDARY LOCK		PA66	Yellow			4545100	4800
2b	CPA		PA66 GF30	Yellow			4545300	2400

CONNECTIONS AND FIXINGS

IMG	1	2	1
			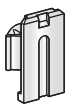
	M800	F800	0300395 0300398

2-WAY POWER WATER PROOF

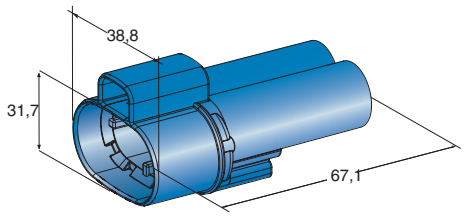

1

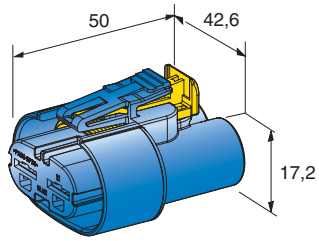

2

IMG	DESCRIPTION	WAY	MATERIAL	COLOUR		P/N BULK	M.O.Q.
1	MALE HOLDER	2	PA66 GF30	Blue		4540210	600
	MALE HOLDER	2	PA66 GF30	Green		4540211	700
	MALE HOLDER	2	PA66 GF30	Black		4540212	600
2	FEMALE HOLDER WITH GASKET	2	PA66 GF30	Blue		4540110	500
	FEMALE HOLDER WITH GASKET	2	PA66 GF30	Green		4540111	500
	FEMALE HOLDER WITH GASKET	2	PA66 GF30	Black		4540112	500
	FEMALE HOLDER WITH GASKET	2	PA66 GF30	Grey		4540113	500

CONNECTIONS AND FIXINGS

IMG	1	2	1
			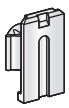
	WP M 800	WP F 800	0300395 0300398

2, 3, 4 - WAY POWER WATER PROOF

1

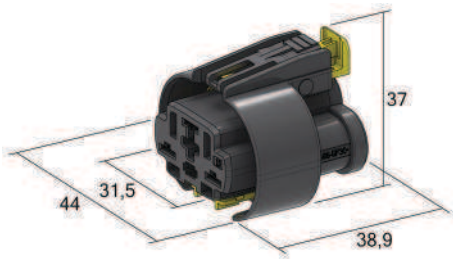

2

IMG	DESCRIPTION	WAY	MATERIAL	COLOUR		P/N BULK	M.O.Q.
1	MALE HOLDER	2	PA66 GF30	■ Black		4551900	500
	MALE HOLDER	3	PA66 GF30	■ Black		4540817	1200
	MALE HOLDER	4	PA66 GF30	■ Black		4551899	500
2	FEMALE HOLDER WITH GASKET	2	PA66 GF30	■ Black		4551898	500
	FEMALE HOLDER WITH GASKET	3	PA66 GF30	■ Black		4540816	1200
	FEMALE HOLDER WITH GASKET	4	PA66 GF30	■ Black		4551897	500

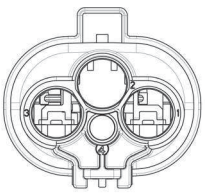

2 WAY

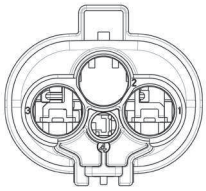

3 WAY

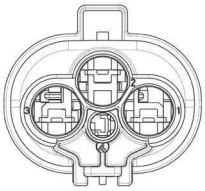

4 WAY

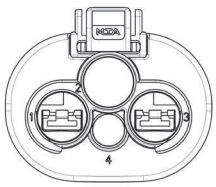

2 WAY

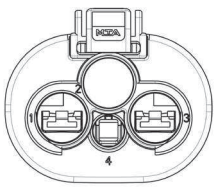

3 WAY

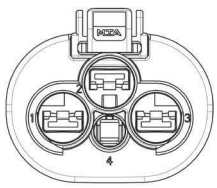

4 WAY

CONNECTIONS AND FIXINGS

IMG 1 (2-3-4 - WAY)	1 (3-4 - WAY)	2 (2-3-4 - WAY)	2 (3- 4 - WAY)
M630 WP	JPT WP M280	F630E WP	F280 WP

HP6 2,3 & 4-WAY

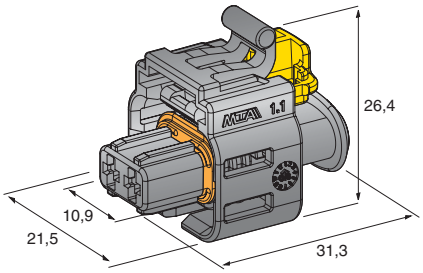

1

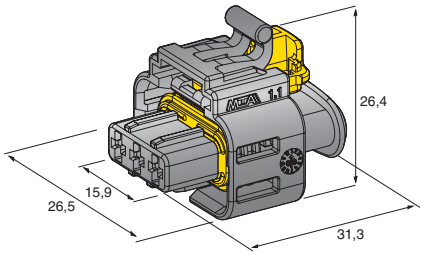

2

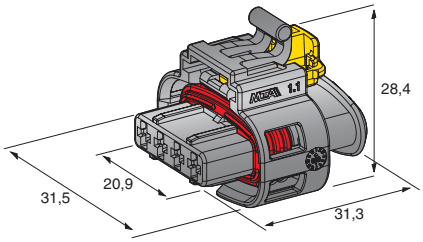

3

IMG	DESCRIPTION	WAY	MATERIAL	COLOUR	P/N BOX	M.O.Q.	P/N BULK	M.O.Q.
1	FEMALE HOLDER	2	PA66 GF30	■ Black	4410840	250	4510840	2500
2	FEMALE HOLDER CODE I	3	PA66 GF30	■ Black	4410881	250	4510881	2000
	FEMALE HOLDER CODE II	3	PA66 GF30	■ Black	4410880	250	4510880	2000
3	FEMALE HOLDER CODE I	4	PA66 GF30	■ Black	4410891	250	4510891	1600
	FEMALE HOLDER CODE II	4	PA66 GF30	■ Black	4410890	250	4510890	1600

1

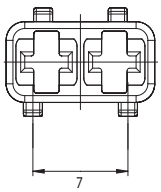

2 CODE I

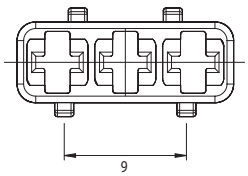

2 CODE II

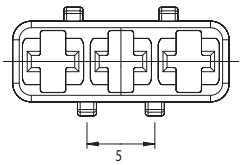

3 CODE I

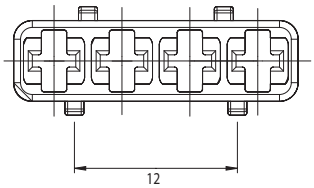

3 CODE II

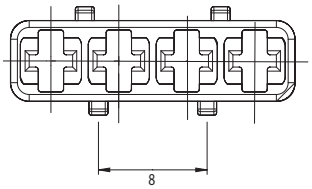

CONNECTIONS AND FIXINGS

IMG 1+2+3

HP6 280

C 280 2-WAY

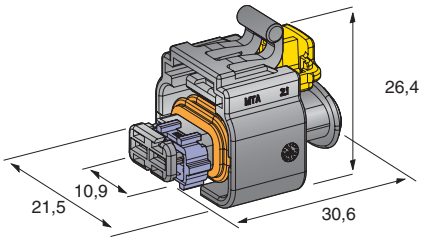

1

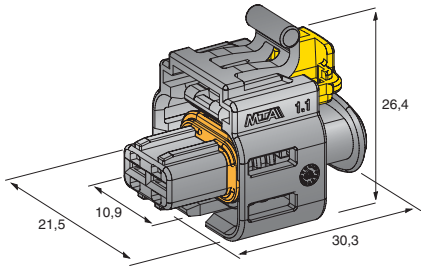

2

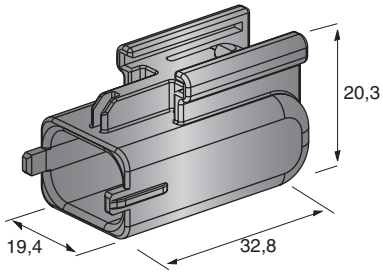

3

IMG	DESCRIPTION	WAY	MATERIAL	COLOUR	S.LOCK COLOUR	P/N BOX	M.O.Q.	P/N BULK	M.O.Q.
1	F. HOLDER FOR BDK & BSK TERMINALS	2	PA66 GF30	Black	Violet	4410801	250	4510801	2500
2	F. HOLDER FOR JPT TERMINALS	2	PA66 GF30	Black		4410830	250	4510830	2500
3	CAP FOR CONNECTORS 4510801/830	2	PA66 GF30	Black				4510802	3000

1

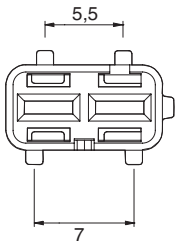

2

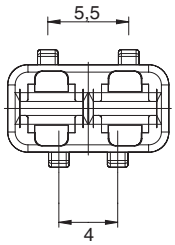

C 280 3&4-WAY

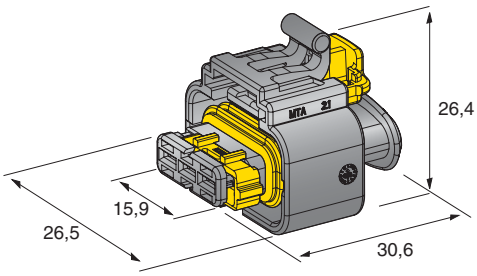

1

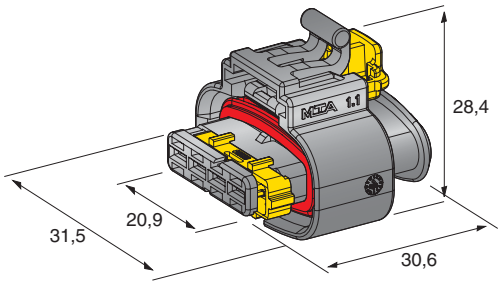

2

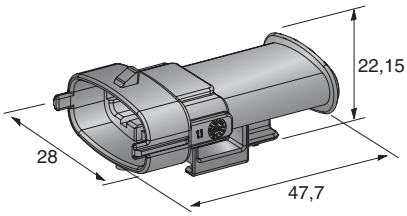

3

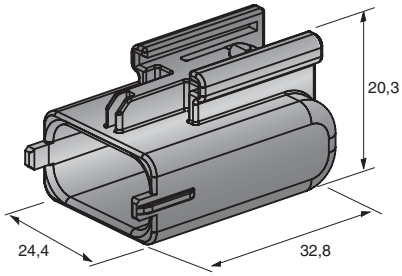

4

IMG	DESCRIPTION	WAY	MATERIAL	COLOUR	S.LOCK COLOUR	P/N BOX	M.O.Q.	P/N BULK	M.O.Q.
1	F. HOLDER FOR BDK & BSK TERMINALS	3	PA66 GF30	Black	Yellow	4410810	250	4510810	2000
	F. HOLDER FOR BDK & BSK TERMINALS	3	PA66 GF30	Black	Violet	4410811	250	4510811	2000
2	F. HOLDER FOR BDK & BSK TERMINALS	4	PA66 GF30	Black	Yellow	4410820	250	4510820	1600
	F. HOLDER FOR BDK & BSK TERMINALS	4	PA66 GF30	Black	Violet	4410821	250	4510821	1600
3	MALE HOLDER FOR 4510821	4	PA66 GF30	Black		4410921	250	4510921	2000
4	CAP FOR CONNECTORS 4510810/811	3	PA66 GF30	Black				4510812	2800

1 YELLOW

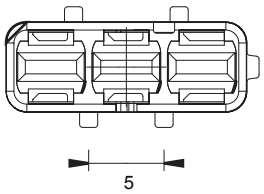

1 VIOLET

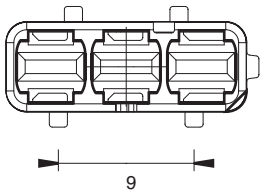

2 YELLOW

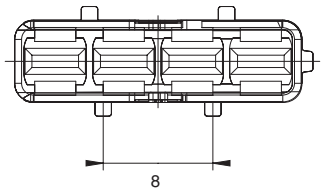

2 VIOLET

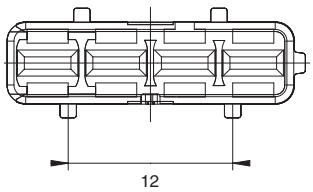

CONNECTIONS AND FIXINGS

IMG 3

0300489

RC 280 8 & 12-WAY

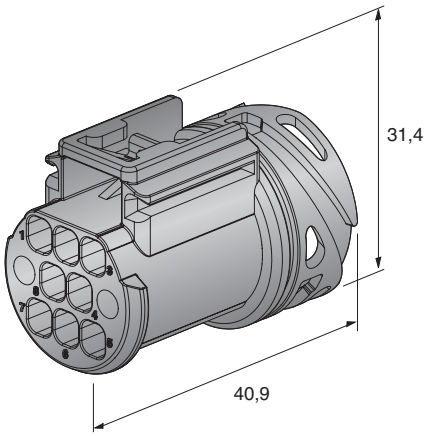

1

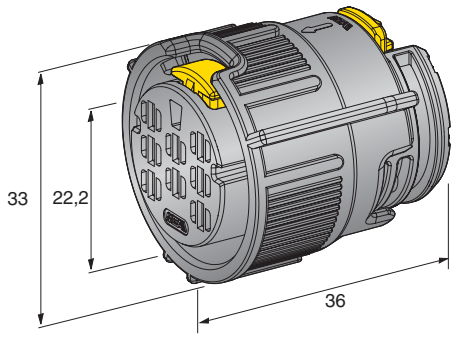

2

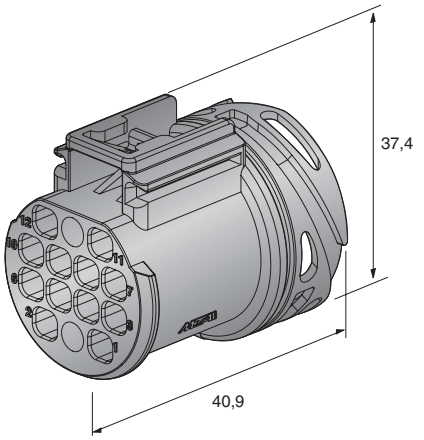

3

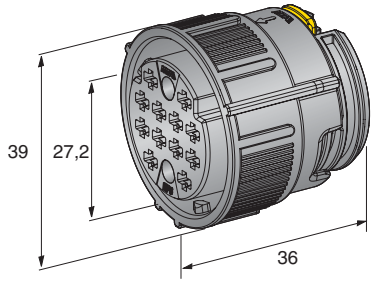

4

IMG	DESCRIPTION	WAY	MATERIAL	COLOUR	P/N BOX	M.O.Q.	P/N BULK	M.O.Q.
1	MALE HOLDER FOR TABS 2,8 x 0,8	8	PA66 GF30	■ Black	4410970	20	4510970	500
2	FEMALE HOLDER FOR BDK & BSK TERMINALS	8	PA66 GF30	■ Black	4410870	20	4510870	120
3	MALE HOLDER FOR TABS 2,8 x 0,8	12	PA66 GF30	■ Black			4510975	350
4	FEMALE HOLDER FOR HP6 TERMINALS	12	PA66 GF30	■ Black			4510875	350

CONNECTIONS AND FIXINGS

IMG 4

HP6 280

ADAPTERS

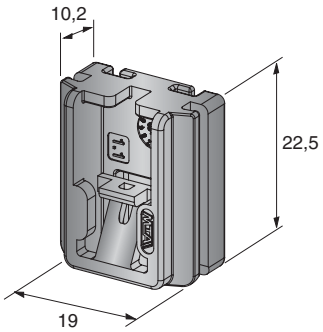

1

IMG	DESCRIPTION	MATERIAL	COLOUR		P/N BULK	M.O.Q.
1	ADAPTER FOR 4510921	PA66 GF30	■ Black		0300489	2500

JOINT

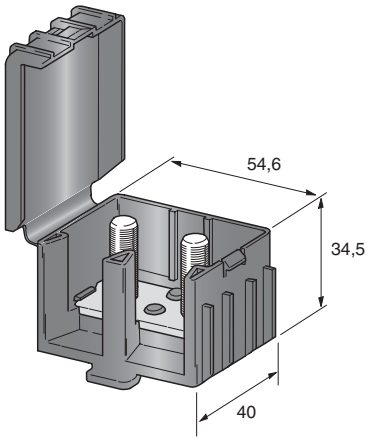

1

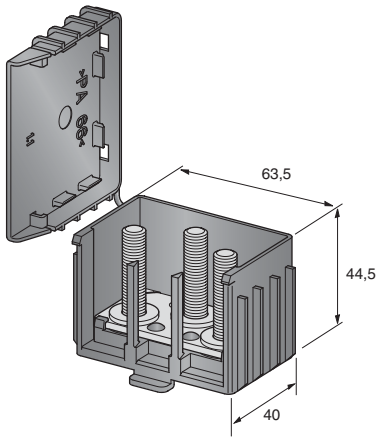

2

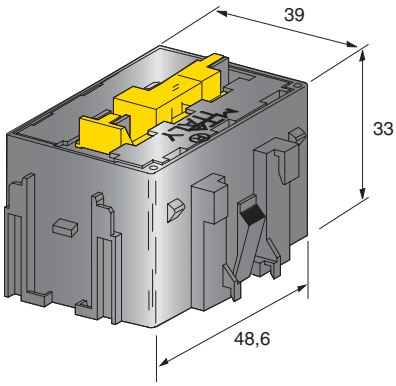

3

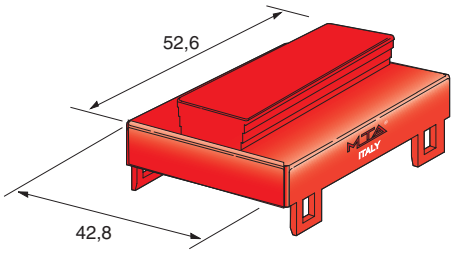

4

IMG	DESCRIPTION	SCREW	WAY	MATERIAL	COLOUR	P/N BOX	M.O.Q.	P/N BULK	M.O.Q.
1	BRANCH KNOT M 88	M 88	2	PA66	Black	4441100	1	4541100	100
2	BRANCH KNOT M 888	M 888	3	PA66	Black	4441200	1	4541200	100
	BRANCH KNOT M 666	M 666	3	PA66	Black			4541202	100
	BRANCH KNOT M 555	M 555	3	PA66	Black			4541201	100
3	HOUSING WITH TERMINALS		6	PA66 GF25	Black			4540601	400
4	COVER FOR HOUSING 6 WAY			PA66	Red			4540602	200
	KIT HOUSING 6 WAY+ COVER					4440600	1		

BULK PACKAGING SUPPLIED WITHOUT NUTS

CONNECTIONS AND FIXINGS

IMG	3	3	3	3
		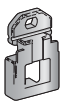	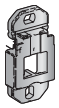	
	0300392	0300430	0300440	4540105

JOINT 9-WAY

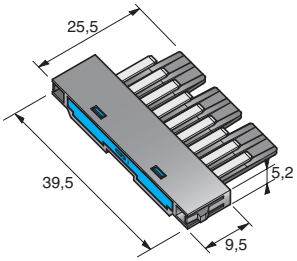

1

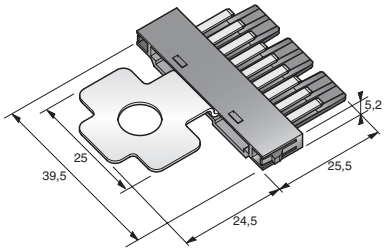

2

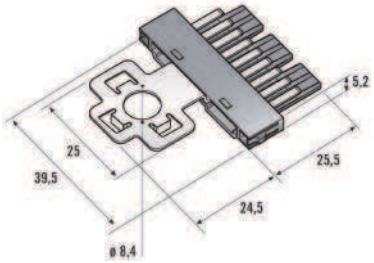

3

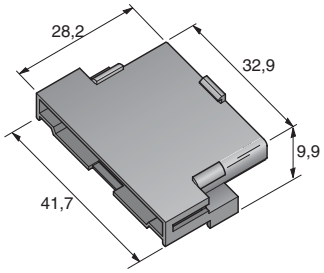

4

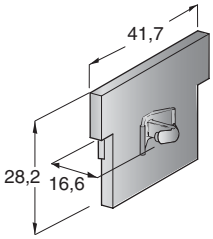

5

IMG	DESCRIPTION	WAY	MATERIAL	COLOUR	COVER COLOUR	P/N BOX	M.O.Q.	P/N BULK	M.O.Q.
1	MALE HOLDER	9	PA66 GF13	Black	Blue	4410610	10	4551610	2500
	MALE HOLDER	6+3	PA66 GF13	Black	Yellow			4551611	2500
	MALE HOLDER	5+4	PA66 GF13	Black	Red			4551612	2500
	MALE HOLDER	3+3+3	PA66 GF13	Black	Green			4551613	2500
2	EARTH MALE HOLDER	9	PA66 GF13	Black				4551614	2000
3	EARTH MALE HOLDER TCK 12S	9	PA66 GF13	Black				4551615	2000
4	FEMALE HOLDER	9	PBT	Black		4410605	10	4551605	2500
	FEMALE HOLDER	9	PBT	Blue				4551606	2500
	FEMALE HOLDER	9	PBT	Green				4551607	2500
5	FIXING PLATE		PA66	Black				0300397	1000

CONNECTIONS AND FIXINGS

IMG 4

070 SERIES

JOINT 18-WAY

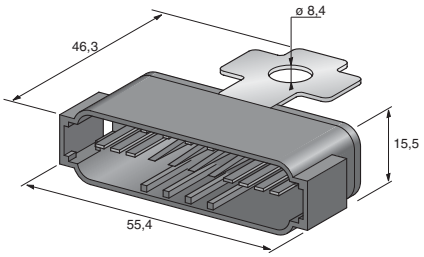

1

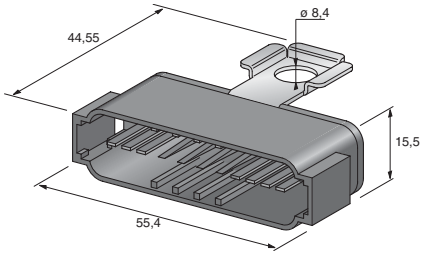

2

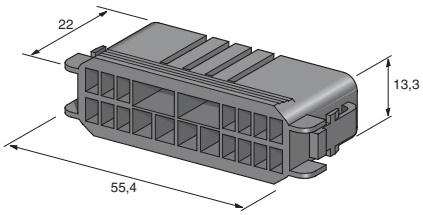

3

IMG	DESCRIPTION	WAY	MATERIAL	COLOUR	P/N BULK	M.O.Q.
1	EARTH MALE HOLDER	18	PA66 GF30	■ Black	4510125	300
2	EARTH MALE HOLDER TCK 12S	18	PA66 GF30	■ Black	4510135	300
3	FEMALE HOLDER	18	PA66 GF30	■ Black	4510120	1500

CONNECTIONS AND FIXINGS

IMG	3	3
	JPT	070 NG SERIES

JOINT 24-WAY

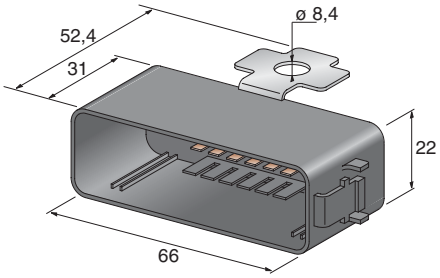

1

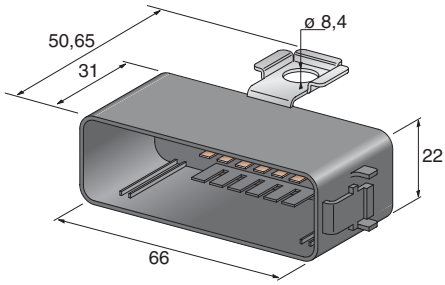

2

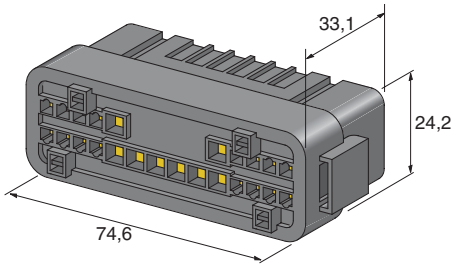

3

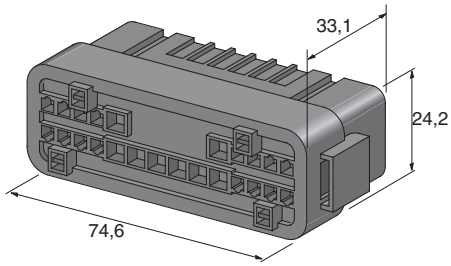

4

IMG	DESCRIPTION	WAY	MATERIAL	COLOUR		P/N BULK	M.O.Q.
1	EARTH MALE HOLDER W.P.	24	PA66 GF30	■ Black		4510115	600
2	EARTH MALE HOLDER TCK 12S	24	PA66 GF30	■ Black		4510130	600
3	FEMALE HOLDER W.P.	24	PA66 GF30	■ Black		4510110	400
4	FEMALE HOLDER	24	PA66 GF30	■ Black		4510145	600

CONNECTIONS AND FIXINGS

IMG	3+4	3+4
	SICMA	CARALARM

SUPERSEAL 1,5

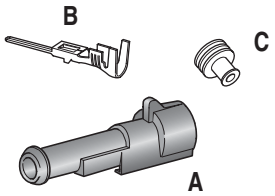

1

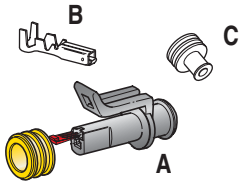

2

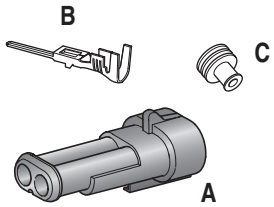

3

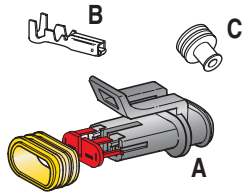

4

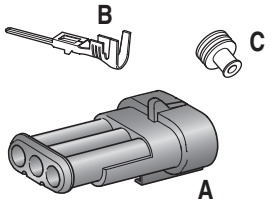

5

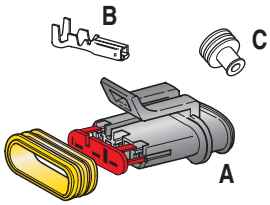

6

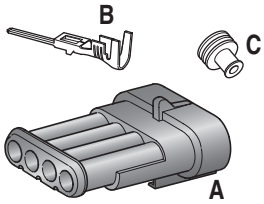

7

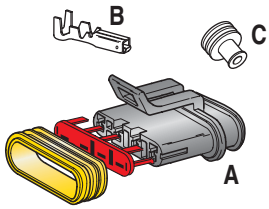

8

IMG	DESCRIPTION	WAY	MATERIAL	COLOUR	P/N BOX	M.O.Q.
1	S-SEAL 1,5 MALE HOLDER	1	PA 66	■ Black	4423610	10
	KIT A+B+C	1	PA 66		3050123	1
2	S-SEAL 1,5 FEMALE HOLDER	1	PA 66	■ Black	4423620	10
	KIT A+B+C	1	PA 66		3050124	1
3	S-SEAL 1,5 MALE HOLDER	2	PA 66	■ Black	4423630	10
	KIT A+B+C	2	PA 66		3050125	1
4	S-SEAL 1,5 FEMALE HOLDER	2	PA 66	■ Black	4423640	10
	KIT A+B+C	2	PA 66		3050126	1
5	S-SEAL 1,5 MALE HOLDER	3	PA 66	■ Black	4423650	10
	KIT A+B+C	3	PA 66		3050127	1
6	S-SEAL 1,5 FEMALE HOLDER	3	PA 66	■ Black	4423660	10
	KIT A+B+C	3	PA 66		3050128	1
7	S-SEAL 1,5 MALE HOLDER	4	PA 66	■ Black	4423670	10
	KIT A+B+C	4	PA 66		3050129	1
8	S-SEAL 1,5 FEMALE HOLDER	4	PA 66	■ Black	4423680	10
	KIT A+B+C	4	PA 66		3050130	1

CONNECTIONS AND FIXINGS

IMG	1+3+5+7	2+4+6+8
	S-SEAL M150	S-SEAL F150

SUPERSEAL 1,5

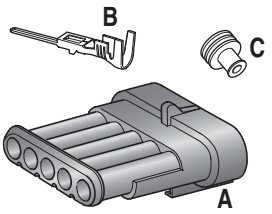

1

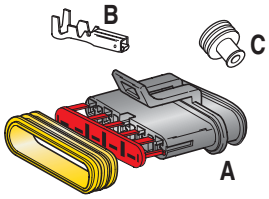

2

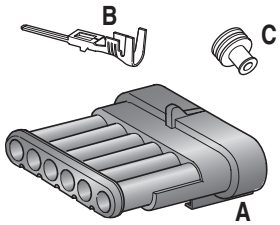

3

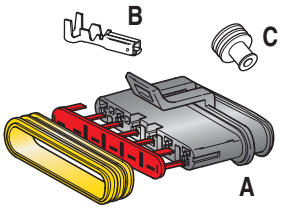

4

IMG	DESCRIPTION	WAY	MATERIAL	COLOUR	P/N BOX	M.O.Q.
1	S-SEAL 1,5 MALE HOLDER	5	PA 66	■ Black	4423690	10
	KIT A+B+C	5	PA 66		3050131	1
2	S-SEAL 1,5 FEMALE HOLDER	5	PA 66	■ Black	4423700	10
	KIT A+B+C	5	PA 66		3050132	1
3	S-SEAL 1,5 MALE HOLDER	6	PA 66	■ Black	4423710	10
	KIT A+B+C	6	PA 66		3050133	1
4	S-SEAL 1,5 FEMALE HOLDER	6	PA 66	■ Black	4423720	10
	KIT A+B+C	6	PA 66		3050134	1

CONNECTIONS AND FIXINGS

IMG	1+3	2+4
	S-SEAL M150	S-SEAL F150

SEAL 2,8 & 6,3

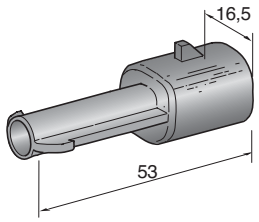

1

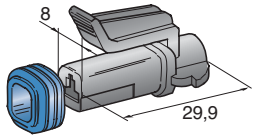

2

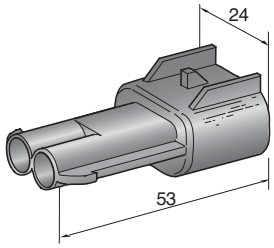

3

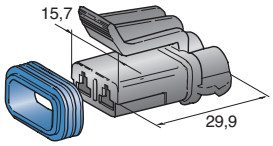

4

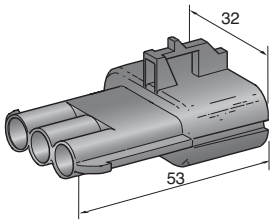

5

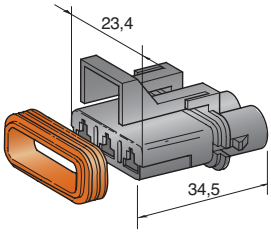

6

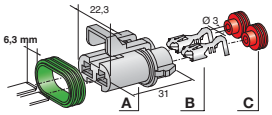

7

IMG	DESCRIPTION	WAY	MATERIAL	COLOUR	P/N BOX	M.O.Q.
1	SEAL 2,8 MALE HOLDER	1	PA 66	■ Black	4423520	5
2	SEAL 2,8 FEMALE HOLDER	1	PA 66	■ Black	4423510	5
3	SEAL 2,8 MALE HOLDER	2	PA 66	■ Black	4423540	5
4	SEAL 2,8 FEMALE HOLDER	2	PA 66	■ Black	4423530	5
5	SEAL 2,8 MALE HOLDER	3	PA 66	■ Black	4423560	5
6	SEAL 2,8 FEMALE HOLDER	3	PA 66	■ Black	4423550	5
7	KIT SEAL 6,3 FEMALE HOLDER WITH TERMINALS AND GASKET	2	PA 66	■ Black	4433800	1

CONNECTIONS AND FIXINGS

IMG	1+3+5	2+4+6
	METRIPACK M280	METRIPACK F280

J.T.& J.P.T.

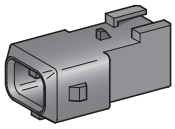

1

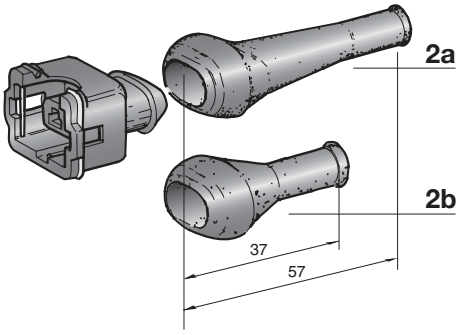

2

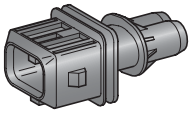

3

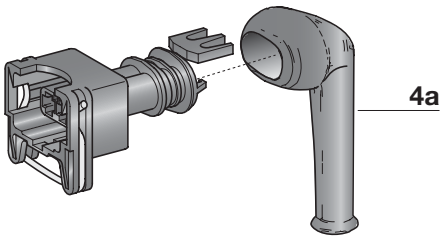

4

IMG	DESCRIPTION	WAY	MATERIAL	COLOUR	P/N BOX	M.O.Q.	P/N BULK	M.O.Q.
1	CONNECTOR JT	2	PA	■ Black	4410660	10		
2	CONNECTOR JT	2	PA	■ Black	4420900	10	4520900	500
2a	COVER		RUBBER	■ Black	4420901	10	4520901	500
2b	COVER		RUBBER	■ Black	4420902	10	4520902	500
3	CONNECTOR JPT	2	PA	■ Black	4410661	10		
4	CONNECTOR JPT	2	PA	■ Black	4420910	10	4520910	500
4a	COVER		RUBBER	■ Black	4420911	10	4520911	500

CONNECTIONS AND FIXINGS

IMG	1	2	3	4
	JT M280	JT F280	JPT WP M280	JPT WP F280

J.T.& J.P.T.

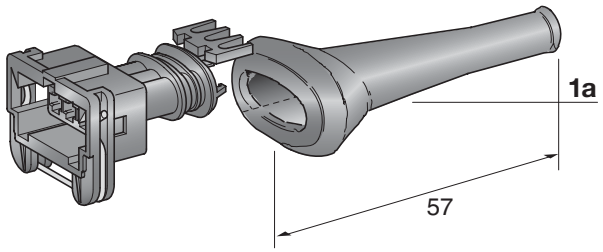

1

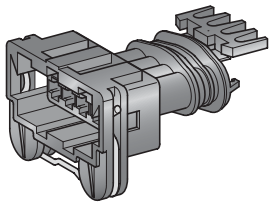

2

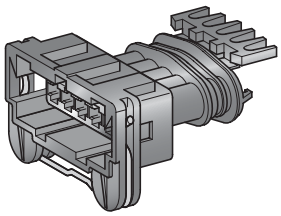

3

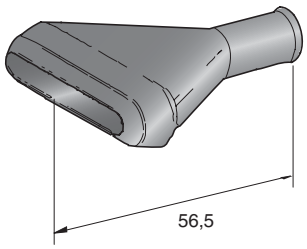

4

IMG	DESCRIPTION	WAY	MATERIAL	COLOUR	P/N BOX	M.O.Q.	P/N BULK	M.O.Q.
1	CONNECTOR JPT	3	PA	■ Black	4420920	10		
1a	COVER		RUBBER	■ Black	4420921	10	4520921	500
2	CONNECTOR JPT	4	PA	■ Black	4410655	10		
3	CONNECTOR JPT	5	PA	■ Black	4410656	10		
4	COVER	7	RUBBER	■ Black	4420931	5	4520931	500

CONNECTIONS AND FIXINGS

IMG 1+2+3

JPT WP F280

MULTIPLE 6,3

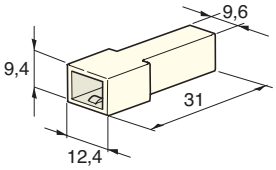

1

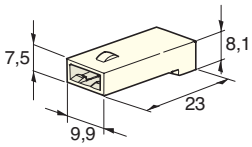

2

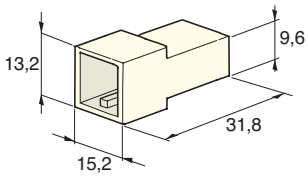

3

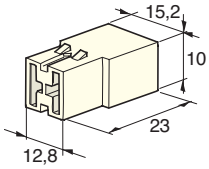

4

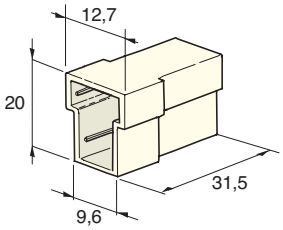

5

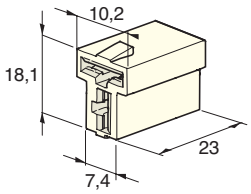

6

IMG	DESCRIPTION	WAY	MATERIAL	COLOUR	P/N BOX	M.O.Q.	P/N BULK	M.O.Q.
1	MALE HOLDER	1	PA	☐ Neutral	4410150	100	4510150	2500
2	FEMALE HOLDER	1	PA	☐ Neutral	4410160	100	4510160	2500
3	MALE HOLDER	2	PA	☐ Neutral	4410170	50	4510170	2500
4	FEMALE HOLDER	2	PA	☐ Neutral	4410180	50	4510180	2500
5	MALE HOLDER	2	PA	☐ Neutral	4410190	50	4510190	2500
6	FEMALE HOLDER	2	PA	☐ Neutral	4410200	50	4510200	2500

CONNECTIONS AND FIXINGS

IMG	1+3+5	2+4+6
	FASTON M630 W/LOCK.NOTCH	FASTON F630 W/LOCK.NOTCH

MULTIPLE 6,3

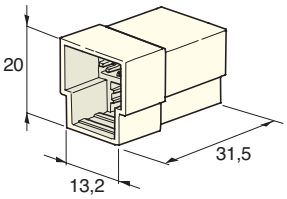

1

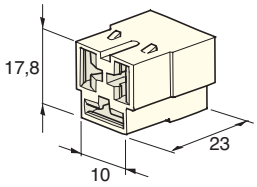

2

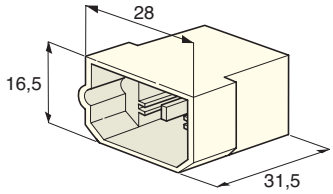

3

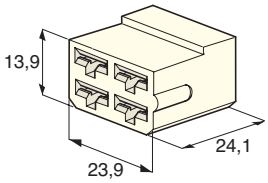

4

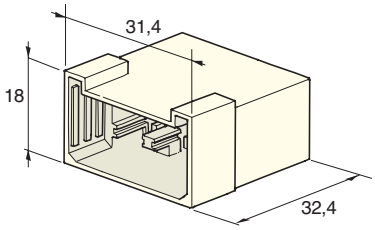

5

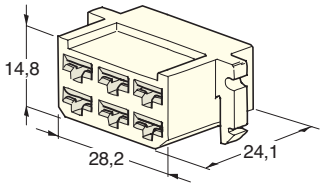

6

IMG	DESCRIPTION	WAY	MATERIAL	COLOUR	P/N BOX	M.O.Q.	P/N BULK	M.O.Q.
1	MALE HOLDER	3	PA	☐ Neutral	4410210	50	4510210	2500
2	FEMALE HOLDER	3	PA	☐ Neutral	4410220	50	4510220	2500
3	MALE HOLDER	4	PA	☐ Neutral	4410230	25	4510230	2500
4	FEMALE HOLDER	4	PA	☐ Neutral	4410240	25	4510240	2500
5	MALE HOLDER	6	PA	☐ Neutral	4410250	25	4510250	1000
6	FEMALE HOLDER	6	PA	☐ Neutral	4410260	25	4510260	1000

CONNECTIONS AND FIXINGS

IMG	1+3+5	2+4+6
	FASTON M630 W/LOCK.NOTCH	FASTON F630 W/LOCK.NOTCH

MULTIPLE 6,3

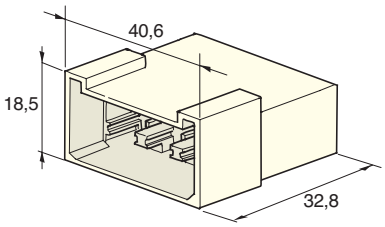

1

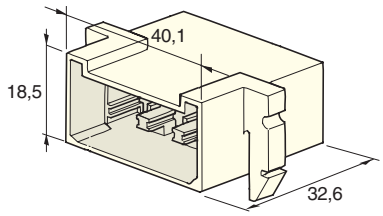

2

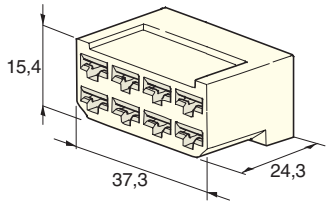

3

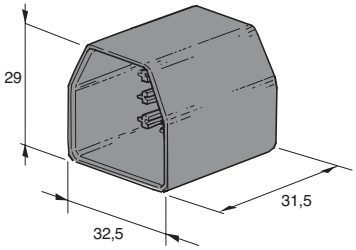

4

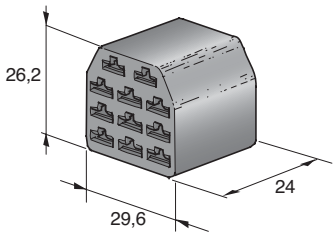

5

IMG	DESCRIPTION	WAY	MATERIAL	COLOUR	P/N BOX	M.O.Q.	P/N BULK	M.O.Q.
1	MALE HOLDER	8	PA	☐ Neutral	4410270	20	4510270	1000
2	MALE HOLDER	8	PA	☐ Neutral	4410290	10	4510290	1000
3	FEMALE HOLDER	8	PA	☐ Neutral	4410280	20	4510280	1000
4	MALE HOLDER	11	PA	■ Black	4410295	20	4510295	150
5	FEMALE HOLDER	11	PA	■ Black	4410296	20	4510296	250

CONNECTIONS AND FIXINGS

IMG	1+2+4	3+5
	FASTON M630 W/LOCK.NOTCH	FASTON F630 W/LOCK.NOTCH

MATE-N-LOCK

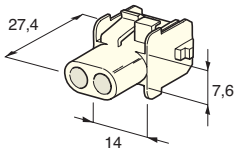

1

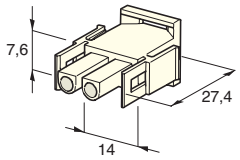

2

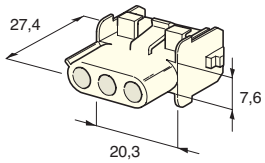

3

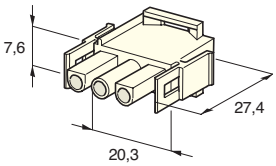

4

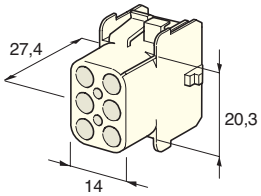

5

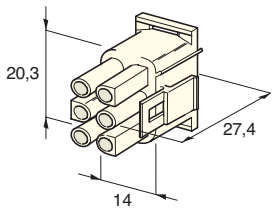

6

IMG	DESCRIPTION	WAY	MATERIAL	COLOUR		P/N BOX	M.O.Q.
1	MALE/FEMALE HOLDER	2	PA	☐ Neutral		4426040	10
2	MALE/FEMALE HOLDER	2	PA	☐ Neutral		4426030	10
3	MALE/FEMALE HOLDER	3	PA	☐ Neutral		4426060	10
4	MALE/FEMALE HOLDER	3	PA	☐ Neutral		4426050	10
5	MALE/FEMALE HOLDER	6	PA	☐ Neutral		4426120	10
6	MALE/FEMALE HOLDER	6	PA	☐ Neutral		4426110	10

CONNECTIONS AND FIXINGS

IMG	1+2+3+4+5+6	1+2+3+4+5+6
	MATE-N-LOCK F2	MATE-N-LOCK M2

MATE-N-LOCK

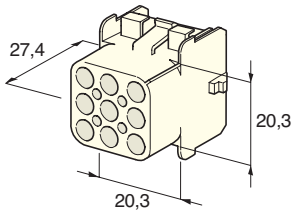

1

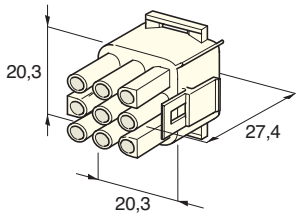

2

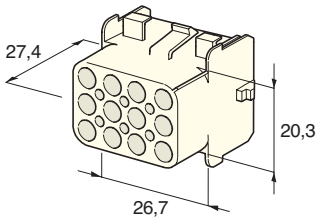

3

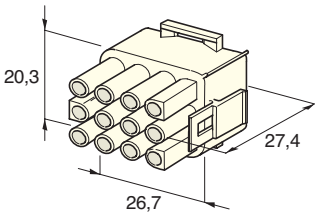

4

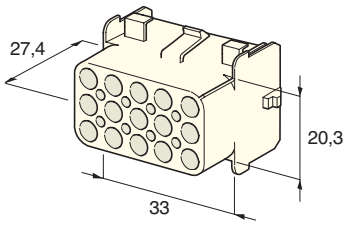

5

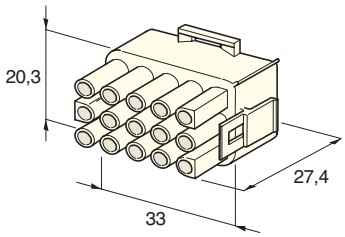

6

IMG	DESCRIPTION	WAY	MATERIAL	COLOUR		P/N BOX	M.O.Q.
1	MALE/FEMALE HOLDER	9	PA	☐ Neutral		4426140	10
2	MALE/FEMALE HOLDER	9	PA	☐ Neutral		4426130	10
3	MALE/FEMALE HOLDER	12	PA	☐ Neutral		4426160	10
4	MALE/FEMALE HOLDER	12	PA	☐ Neutral		4426150	10
5	MALE/FEMALE HOLDER	15	PA	☐ Neutral		4426180	10
6	MALE/FEMALE HOLDER	15	PA	☐ Neutral		4426170	10

CONNECTIONS AND FIXINGS

IMG	1+2+3+4+5+6	1+2+3+4+5+6
	MATE-N-LOCK F2	MATE-N-LOCK M2

TERMINAL COVERS

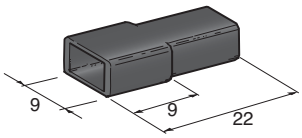

1

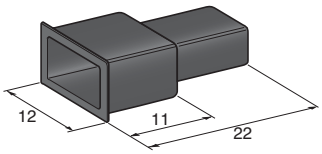

2

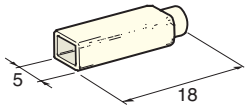

3

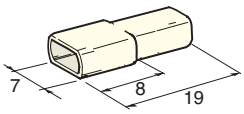

4

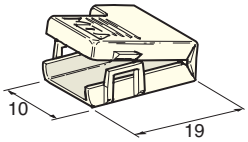

5

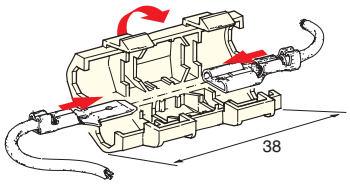

6

IMG	DESCRIPTION	MATERIAL	COLOUR	P/N BOX	M.O.Q.	P/N BULK	M.O.Q.
1	FEMALE 6,3 COVER	PE	■ Black	4410070	200	4510070	20000
	FEMALE 6,3 COVER	PE	■ Yellow	4410072	200		
	FEMALE 6,3 COVER	PE	■ Blue	4410073	200	4510073	20000
	FEMALE 6,3 COVER	PE	■ Red	4410074	200	4510074	20000
	FEMALE 6,3 COVER	PE	□ Neutral	4410076	200	4510076	20000
2	MALE 6,3 COVER	PE	■ Black	4410080	200	4510080	20000
	MALE 6,3 COVER	PE	■ Yellow	4410082	200		
	MALE 6,3 COVER	PE	■ Red	4410084	200		
	MALE 6,3 COVER	PE	□ Neutral	4410086	200	4510086	20000
3	FEMALE 2,8 COVER	PE	□ Neutral	4410065	200		
4	FEMALE 4,8 COVER	PE	□ Neutral	4410068	200		
5	FLAG 6,3 COVER	PA	□ Neutral	4410060	200		
6	FASTON 6,3 COVER	PA	□ Neutral	4410083	50		

CONNECTIONS AND FIXINGS

IMG	1+6	2+6	3	4	5
	FASTON F630	FASTON M630	FASTON F280	FASTON F480	FASTON F630 FLAG

TERMINAL COVERS

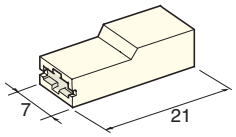

1

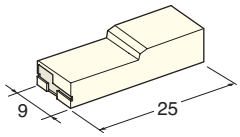

2

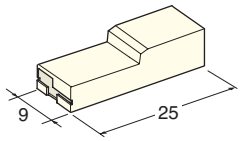

3

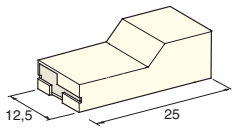

4

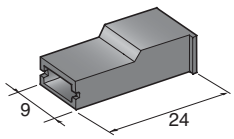

5

IMG	DESCRIPTION	MATERIAL	COLOUR	P/N BOX	M.O.Q.	P/N BULK	M.O.Q.
1	FEMALE 4,8 COVER	PA	☐ Neutral	4410062	200		
2	FEMALE 6,3 COVER	PA	☐ Neutral	4410077	200	4510077	20000
3	FEMALE 6,3 COVER	PA	☐ Neutral	4410078	200		
4	FEMALE 9,5 COVER	PA	☐ Neutral	4410079	50		
5	FEMALE 6,3 COVER	PA	■ Black	4420800	50		

CONNECTIONS AND FIXINGS

IMG	1	2+3	4	5
	FASTON F480	FASTON F630	FASTON F950	FASTON F630

CONNECTOR STRIPS

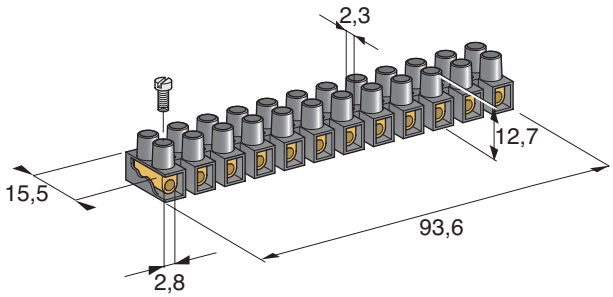

1

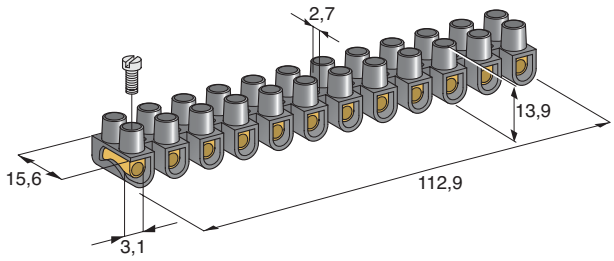

2

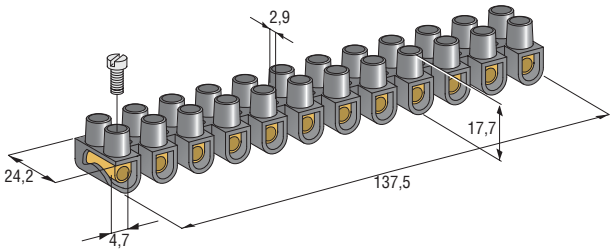

3

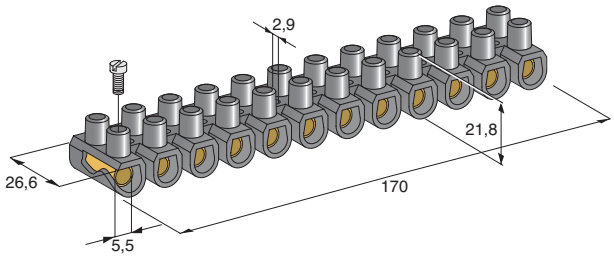

4

IMG	DESCRIPTION	WAY	MATERIAL	VOLT	In	OPERATION TEMP	CABLE SECTION mm²	P/N BOX	M.O.Q.
1	CONNECTOR STRIP	12	PP Black	380	24A	85°C	2,5	4430100	10
2	CONNECTOR STRIP	12	PP Black	380	24A	85°C	6	4430110	10
3	CONNECTOR STRIP	12	PP Black	450	24A	85°C	12	4430120	10
4	CONNECTOR STRIP	12	PP Black	450	24A	85°C	16	4430130	10

BATTERY TERMINALS

DOUBLE RING

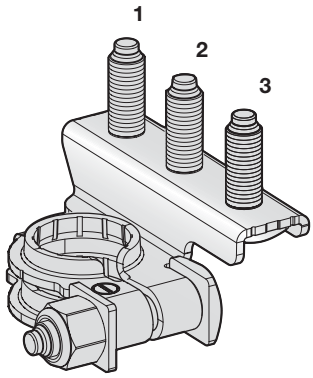

1

IMG	DESCRIPTION	POLARITY	SCREW 1	SCREW 2	SCREW 3	MATERIAL	MATERIAL THICKNESS mm	P/N BOX	M.O.Q.	P/N BULK	M.O.Q.
1	M686DX	+	M6	M8	M6	CuZn-Sn	1,5	1507701	10	1507700	200
	M686DX	-	M6	M8	M6	CuZn-Sn	1,5	1507704	10	1507705	250
	M686SX	+	M6	M8	M6	CuZn-Sn	1,5			1507720	250
	M666DX	+	M6	M6	M6	CuZn-Sn	1,5			1507703	200
	M666DX	-	M6	M6	M6	CuZn-Sn	1,5			1507707	220
	M666SX	+	M6	M6	M6	CuZn-Sn	1,5			1507708	220
	M666SX	-	M6	M6	M6	CuZn-Sn	1,5			1507736	200
	M668DX	+	M6	M6	M8	CuZn-Sn	1,5			1507710	180
	M080SX	+	/	M8	/	CuZn-Sn	1,5			1507760	250
	M606DX	+	M6	/	M6	CuZn-Sn	1,5			1507772	250
	M606SX	+	M6	/	M6	CuZn-Sn	1,5			1507771	250
	M680DX	-	M6	M8	/	CuZn-Sn	1,5			1507785	250
	M868DX	+	M8	M6	M8	CuZn-Sn	1,5			1507790	200
	M868SX	+	M8	M6	M8	CuZn-Sn	1,5			1508001	180
	M806DX	+	M8	/	M6	CuZn-Sn	1,5			1507795	250

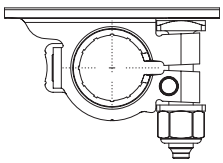

DX

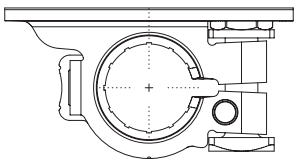

SX

DOUBLE RING

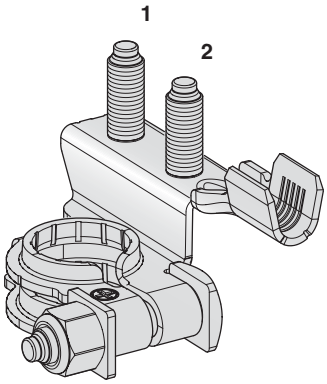

1

IMG	DES.	POLARITY	SCREW 1	SCREW 2	WIRE SECTION mm²	MATERIAL	MATERIAL THICKNESS mm	P/N BOX	M.O.Q.	P/N BULK	M.O.Q.
1	M66DX	+	M6	M6	10÷20	CuZn-Sn	1,3			1507800	200
	M06SX	+	/	M6	10÷20	CuZn-Sn	1,3			1507810	250
	M66DX	+	M6	M6	25÷40	CuZn-Sn	1,3	1507821	10	1507820	200
	M66DX	-	M6	M6	25÷40	CuZn-Sn	1,3			1507875	200
	M06SX	+	/	M6	25÷40	CuZn-Sn	1,3			1507830	200
	M66SX	-	M6	M6	25÷40	CuZn-Sn	1,3			1507885	200

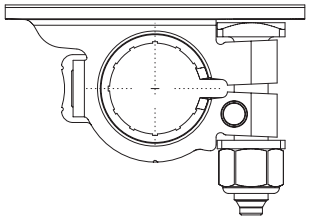

DX

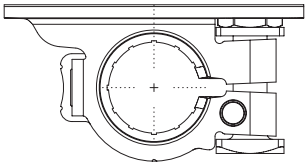

SX

QUICK LOCK

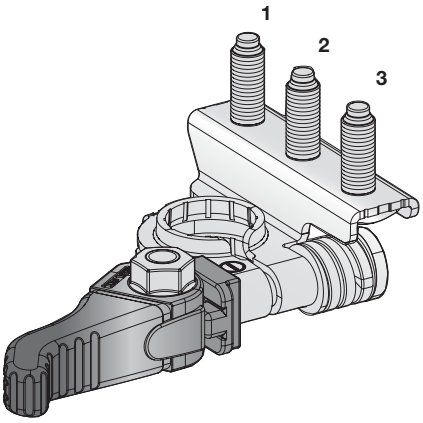

1

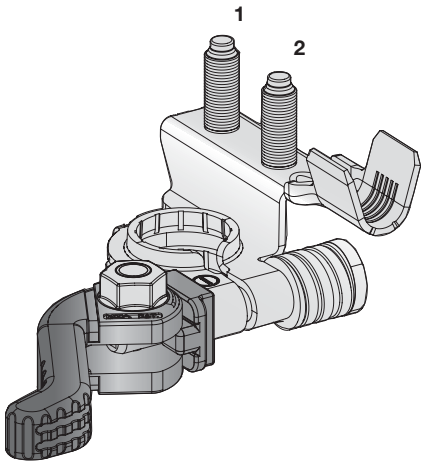

2

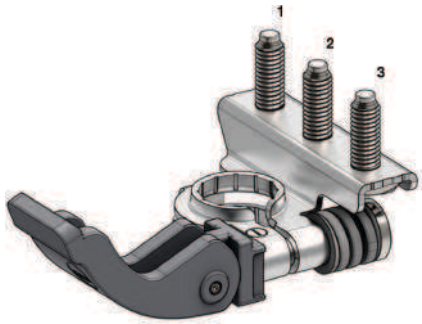

3

IMG.	DES.	POLARITY	SCREW 1	SCREW 2	SCREW 3	WIRE SECTION mm²	MATERIAL	MATERIAL THIKNESS mm	P/N BOX	M.O.Q.	P/N BULK	M.O.Q.
1	M666SX	-	M6	M6	M6		CuZn-Sn	1,5	1507904	1	1507905	130
	M666SX	+	M6	M6	M6		CuZn-Sn	1,5			1507975	130
	M666DX	-	M6	M6	M6		CuZn-Sn	1,5	1507916	1	1507915	130
2	M66DX	-	M6	M6		10÷20	CuZn-Sn	1,3	1507926	1	1507925	130
	M66DX	-	M6	M6		25÷40	CuZn-Sn	1,3	1507956	1	1507955	130
	M60DX	-	M6			10÷20	CuZn-Sn	1,3			1507946	100
	M66DX	-	M6	M6		AWG1	CuZn-Sn	1,3			1507957	200
3	VQR	-	M6	M6	M6		CuZn33-Sn	1,5			1507601	TBD

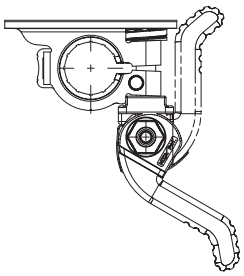

DX

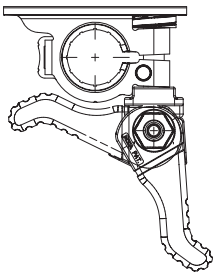

SX

STRIP TYPE

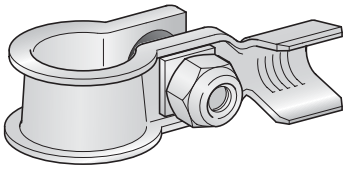

1

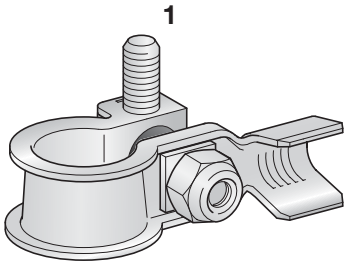

2

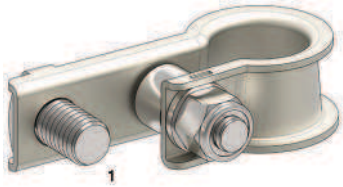

3

IMG	DESCRIPTION	POLARITY	SCREW(1)	WIRE SECTION mm²	MATERIAL	MATERIAL THICKNESS mm	P/N BOX	M.O.Q.	P/N BULK	M.O.Q.
1	STRIP DX	-		10÷20	CuZn-Sn	1,2	1506656	10	1506655	400
	STRIP DX	-		25÷40	CuZn-Sn	1,2	1506666	10	1506665	400
	STRIP SX	-		10÷20	CuZn-Sn	1,2			1506658	400
	STRIP SX	-		25÷40	CuZn-Sn	1,2			1506668	400
	STRIP DX	+		10÷20	CuZn-Sn	1,2	1506721	10	1506720	400
	STRIP DX	+		25÷40	CuZn-Sn	1,2	1506731	10	1506730	400
2	STRIP DX	-	M6	10÷20	CuZn-Sn	1,2			1506650	400
	STRIP DX	-	M6	25÷40	CuZn-Sn	1,2			1506660	400
3	STRIP DX	-	M8		CuZn-Sn	1,2			1506675	400
	STRIP SX	-	M8		CuZn-Sn	1,2			1506678	400

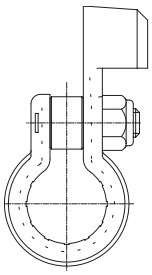

DX

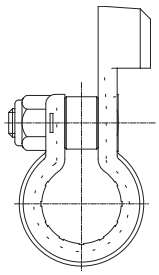

SX

DIE CAST

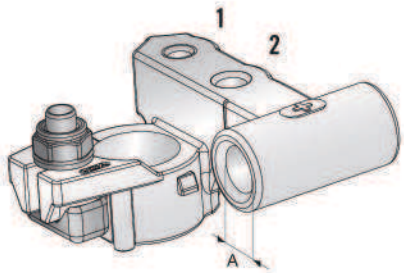

1

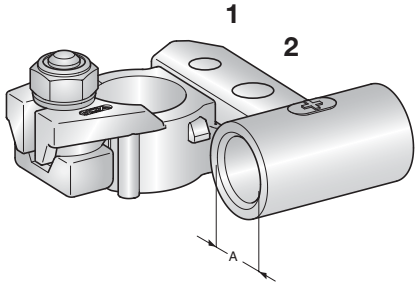

2

IMG	DESCRIPTION	POLARITY	SCREW 1	SCREW 2	MATERIAL	A mm²	P/N BOX	M.O.Q.	P/N BULK	M.O.Q.
1	DIE CAST	+	M6	M8	BRASS Sn	50			1506765	70
2	DIE CAST	+	M6	M8	BRASS Sn	70	1506741	1	1506740	150
	DIE CAST	-	M6	M8	BRASS Sn	50	1506761	1	1506760	150

DIE CAST

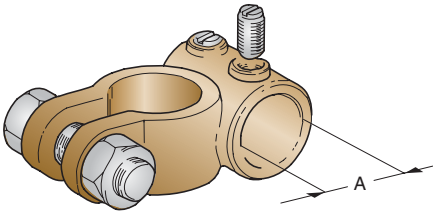

1

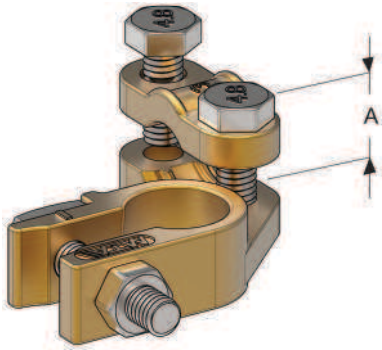

2

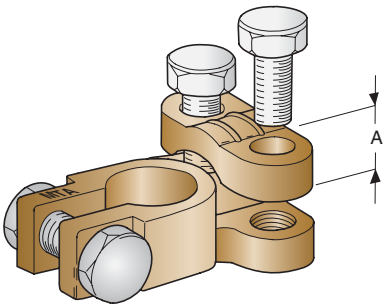

3

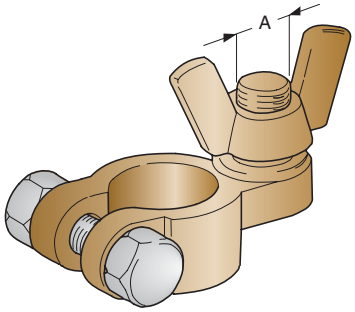

4

IMG	DESCRIPTION	POLARITY	MATERIAL	A mm²	P/N BOX	M.O.Q.
1	DIE CAST	+	BRASS	50	1506060	25
	DIE CAST	-	BRASS	50	1506070	25
	DIE CAST	+	BRASS	70	1506080	25
	DIE CAST	-	BRASS	70	1506090	25
2	DIE CAST	+	BRASS	25÷50	1506100	25
	DIE CAST	-	BRASS	25÷50	1506110	25
3	DIE CAST	+	BRASS	25÷50	1506270	25
	DIE CAST	-	BRASS	25÷50	1506280	25
4	DIE CAST	+	BRASS	M10	1506120	25
	DIE CAST	-	BRASS	M8	1506130	25

DIE CAST & FRENCH TYPES

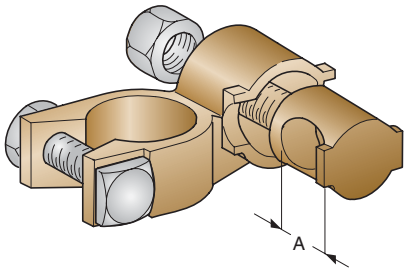

1

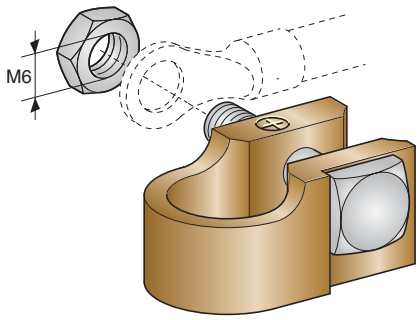

2

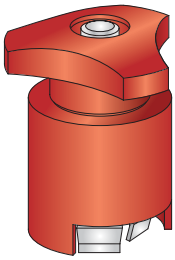

3

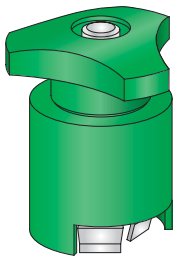

4

IMG	DESCRIPTION	POLARITY	WIRE SECTION mm²	MATERIAL	P/N BOX	M.O.Q.
1	BATTERY TERMINAL	+	25	BRASS	1506250	25
	BATTERY TERMINAL	-	25	BRASS	1506260	25
2	BATTERY TERMINAL	+/-	-	BRASS	1506820	1+1
3	BATTERY TERMINAL	+	-	PE - NYLON	1506200	25
4	BATTERY TERMINAL	-	-	PE - NYLON	1506210	25

PROTECTION COVERS

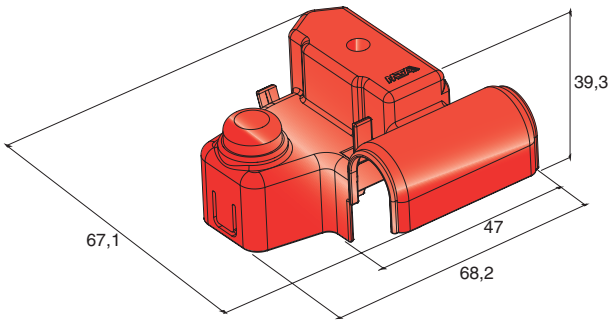

1

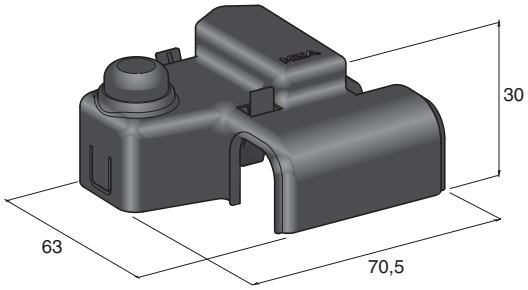

2

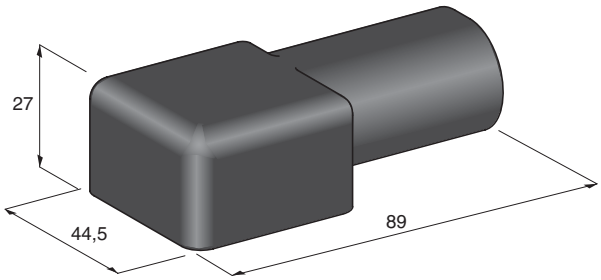

3

IMG	DESCRIPTION	POLARITY	MATERIAL	COLOUR	P/N BOX	M.O.Q.	P/N BULK	M.O.Q.
1	COVER FOR 1506765	+	PP	Red			4510499	500
2	COVER FOR 150674X	+	PP	Red	4410496	10	4510496	500
	COVER FOR 150676X	-	PP	Black			4510497	500
3	COVER		EPDM	Black	4410495	10		

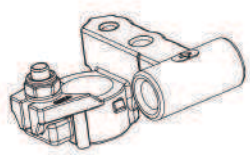

1

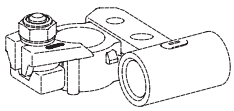

2

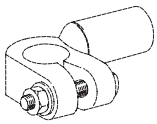

3

PROTECTION COVERS

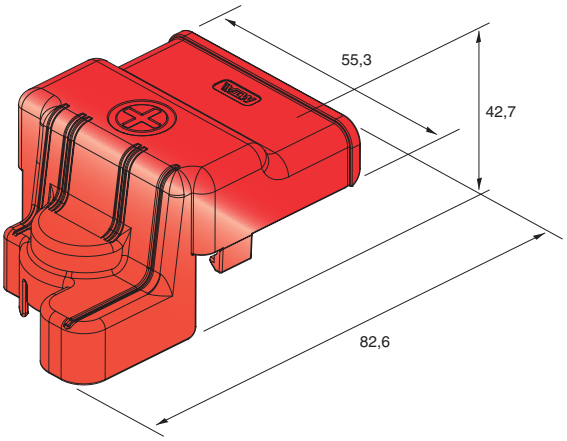

1

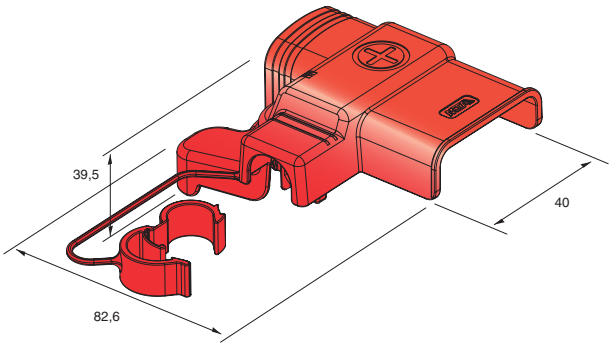

2

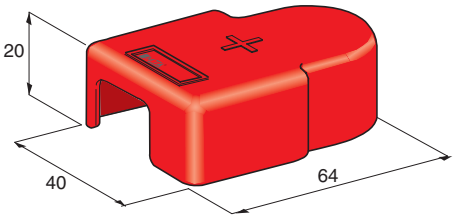

3

IMG	DESCRIPTION	POLARITY	MATERIAL	COLOUR	P/N BOX	M.O.Q.	P/N BULK	M.O.Q.
1	COVER FOR 15077XX	+	PP	Red			4510503	100
2	COVER FOR 15078XX	+	PP	Red			4510502	100
3	COVER FOR 1506720/21/30/31	+	PP	Red	4410480	10	4510480	500

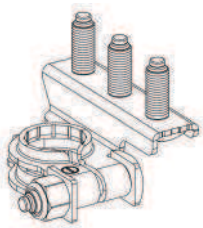

1

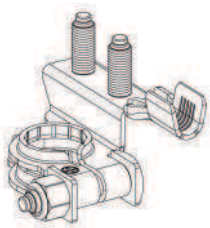

2

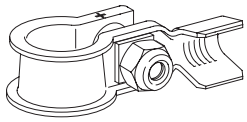

3

TERMINALS

STANDARD RING

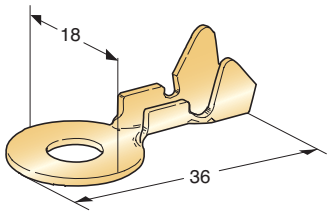

1

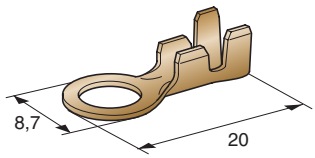

2

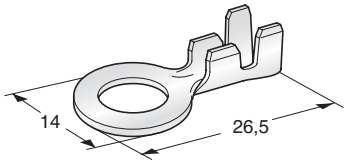

3

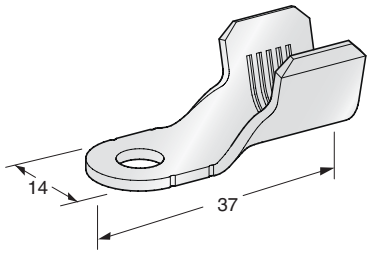

4

IMG	DESCRIPTION	SCREW	WIRE SECTION mm²	MATERIAL	MATERIAL THICKNESS mm	P/N BOX	M.O.Q.	P/N BULK	M.O.Q.
1	UNI 679L35	M10	4÷6	CuZn	0,7	1602550	100		
2	STDL22	M4	1÷2,5	CuZn	0,6	1602970	100	1902970	5000
	STDL22	M5	1÷2,5	CuZn	0,6	1602980	100	1902980	5000
	STDL22	M6	1÷2,5	CuZn	0,6	1602981	100	1902981	5000
3	STDL26	M6	3÷6	CuZn	0,8	1602990	100		
	STDL26	M8	3÷6	CuZn	0,8	1603000	100		
4	STDL37	M6	25÷40	CuZn-Sn	1,5			1609000	2000

GROUND

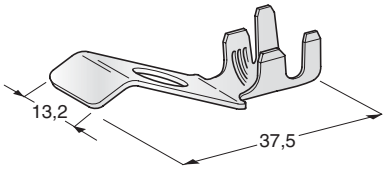

1

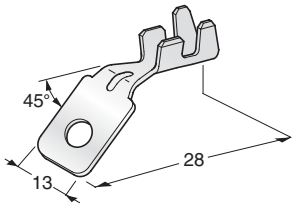

2

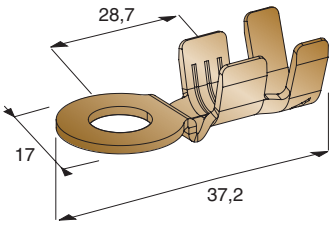

3

IMG	DESCRIPTION	SCREW	WIRE SECTION mm²	MATERIAL	MATERIAL THICKNESS mm		P/N REEL	M.O.Q.
1	GND 188 TW25	M8	2,5÷4	CuZn-Sn	0,8		1708150	3600
2	GND 188 G45	M5	2,5÷6	CuZn-Sn	0,8		1708160	2400
3	GND L37M8	M8	10	CuZn	1,2		1793754	4000

GROUND

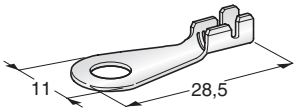

1

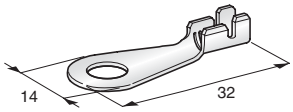

2

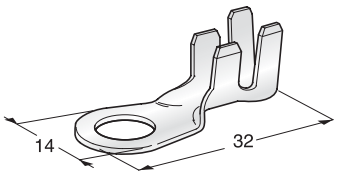

3

IMG	DESCRIPTION	SCREW	WIRE SECTION mm²	MATERIAL	MATERIAL THICKNESS mm	P/N BOX	M.O.Q.	P/N REEL	M.O.Q.
1	GND	M5	0,5÷1,5	CuZn-Sn	0,6			1706740	12000
	GND FLY	M5	0,5÷1,5	CuZn-Sn	0,6			1706741	12000
2	GND	M6	1÷2,5	CuZn-Sn	0,8	1106720	100	1706720	6000
	GND	M6	4÷6	CuZn-Sn	0,8	1106700	100	1706700	4500
	GND	M6	8÷10	CuZn-Sn	0,8	1106750	100	1706750	2400
	GND	M8	1÷2,5	CuZn-Sn	0,8	1106730	100	1706730	6000
	GND	M8	4÷6	CuZn-Sn	0,8	1106710	100	1706710	4500
	GND	M8	8÷10	CuZn-Sn	0,8	1106760	100	1706760	2400
3	GND FLY	M6	1÷2,5	CuZn-Sn	0,8			1706721	6000
	GND FLY	M6	3÷6	CuZn-Sn	0,8			1706701	4500
	GND FLY	M8	1÷2,5	CuZn-Sn	0,8			1706731	6000
	GND FLY	M8	3÷6	CuZn-Sn	0,8			1706711	4500

CBA

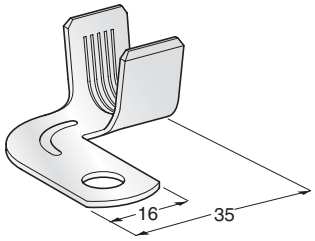

1

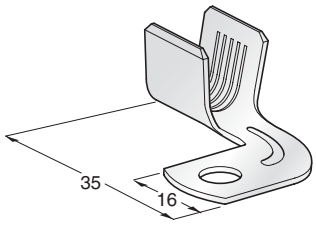

2

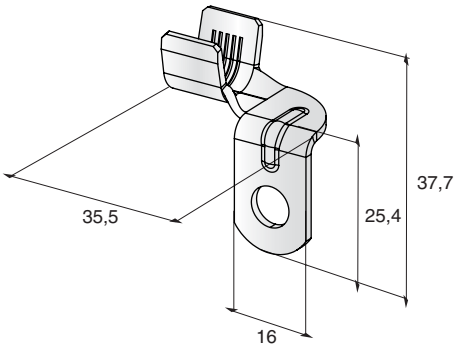

3

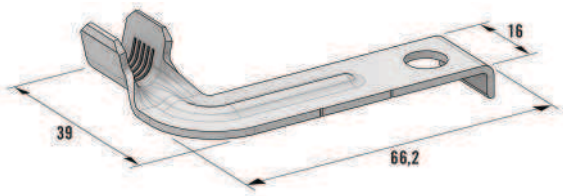

4

IMG	DESCRIPTION	SCREW	WIRE SECTION mm²	MATERIAL	MATERIAL THICKNESS mm	P/N BOX	M.O.Q.	P/N REEL	M.O.Q.
1	CBA FL 90	M8	10÷20	CuZn-Sn	1,5			1708170	800
	CBA FL 90	M6	10÷20	CuZn-Sn	1,5			1708175	700
	CBA FL 90	M6	25÷42	CuZn-Sn	1,5	1604300	1500		
	CBA FL 90	M8	25÷42	CuZn-Sn	1,5	1608210	1500	1708210	600
	CBA FL 90	M6	25÷42	CuZn-Sn	1,5			1708215	1200
	CBA FL 90	M8	50÷70	CuZn-Sn	1,8			1708230	600
2	CBA SX FL90	M6	20÷40	CuZn-Sn	1,8			1708325	600
	CBA SX FL90	M8	20÷40	CuZn-Sn	1,8	1608321	550	1708320	600
	CBA SX FL90	M6	50÷70	CuZn-Sn	1,8			1708315	600
	CBA SX FL90	M8	50÷70	CuZn-Sn	1,8			1708310	600
3	CBA SX G90	M8	20÷40	CuZn-Sn	1,8	1608323	1000		
4	CBA J81 L4	M8	10÷20	Cu-Sn	1,8	1609200	500		

MEGA

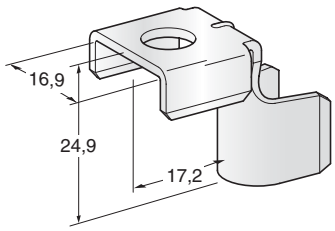

1

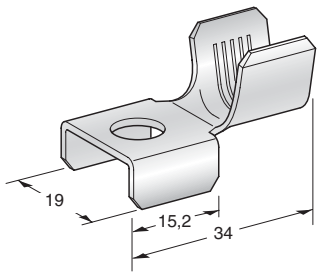

2

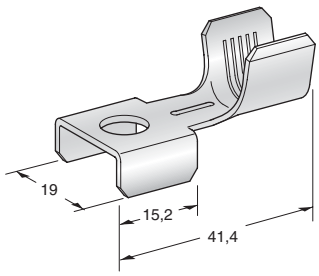

3

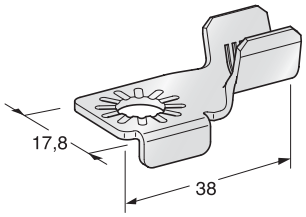

4

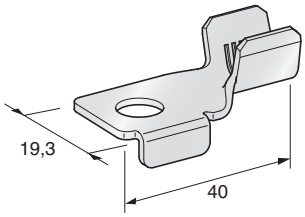

5

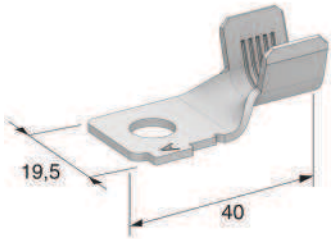

6

IMG	DESCRIPTION	SCREW	WIRE SECTION mm²	MATERIAL	MATERIAL THICKNESS mm	P/N BOX	M.O.Q.	P/N REEL	M.O.Q.
1	MEGA G90	M8	10÷20	Cu-Sn	1,5	1608180	650		
	MEGA G90	M8	25÷35	Cu-Sn	1,5	1608190	500		
2	MEGA	M8	10÷20	Cu-Sn	1,2	1108110	10	1708110	1200
	MEGA	M8	25÷35	Cu-Sn	1,2	1108120	10	1708120	900
3	MEGA	M8	25÷40	Cu-Sn	1,5	1608196	500		
	MEGA	M8	AWG-1	Cu-Sn	1,5	1608199	500		
4	W84	M8	10÷25	CuZn-Sn	1,5	1608800	1400		
5	W62	M8	25÷40	Cu-Sn	1,5	1609320	700		
6	W62 POL.A	M8	25÷40	Cu-Sn	1,5	1609330	700		
	W62 POL.B	M8	25÷40	Cu-Sn	1,5	1609340	700		

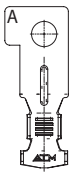

POL A

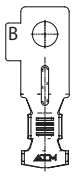

POL B

MIDI

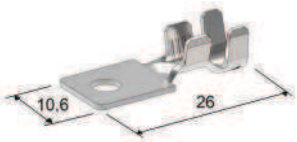

1

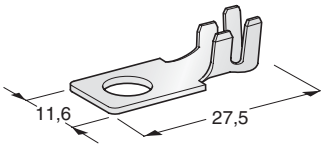

2

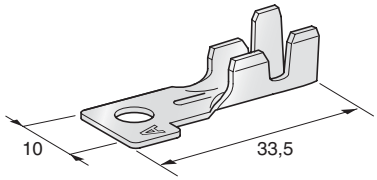

3

IMG	DESCRIPTION	SCREW	WIRE SECTION mm²	MATERIAL	MATERIAL THICKNESS mm	P/N REEL	M.O.Q.
1	MIDI	M4	2,5÷4	CuZn-Sn	0,8	1708280	2000
2	MIDI	M5	2,5÷4	CuZn-Sn	0,8	1708240	2000
	MIDI	M5	6÷8	CuZn-Sn	0,8	1708245	1600
	MIDI	M6	6÷8	CuZn-Sn	0,8	1708246	1600
3	MIDI	M5	2,5÷4	Cu-Sn	0,8	1705606	2000
	MIDI POL A	M5	2,5÷4	Cu-Sn	0,8	1705616	2000
	MIDI POL B	M5	2,5÷4	Cu-Sn	0,8	1705626	2000
	MIDI POL E	M5	2,5÷4	Cu-Sn	0,8	1705656	2000
	MIDI POL A	M5	6÷8	Cu-Sn	0,8	1705715	2000
	MIDI POL B	M5	6÷8	Cu-Sn	0,8	1705725	2000
	MIDI POL D	M5	6÷8	Cu-Sn	0,8	1705745	2000
	MIDI POL C	M5	6÷8	Cu-Sn	0,8	1705735	2000

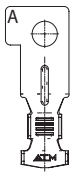

POL A

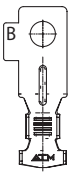

POL B

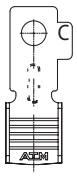

POL C

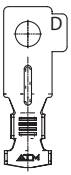

POL D

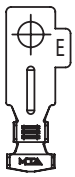

POL E

MIDI

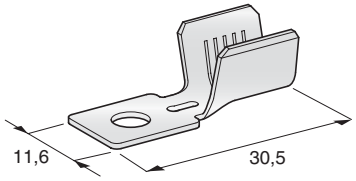

1

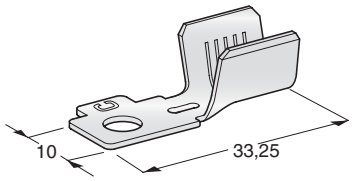

2

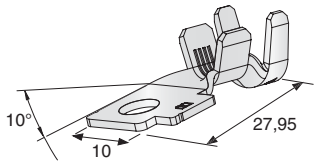

3

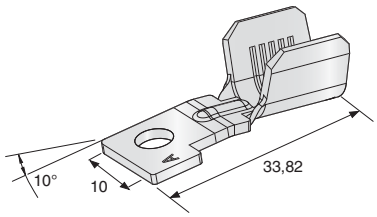

4

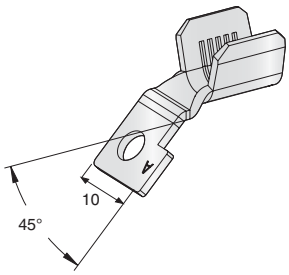

5

IMG	DESCRIPTION	SCREW	WIRE SECTION mm²	MATERIAL	MATERIAL THICKNESS mm	P/N BOX	M.O.Q.	P/N REEL	M.O.Q.
1	MIDI	M5	10÷16	CuZn-Sn	0,8			1708250	1600
2	MIDI POL A	M5	10÷20	Cu-Sn	1,5			1705855	1000
	MIDI POL B	M5	10÷20	Cu-Sn	1,5			1705825	1000
	MIDI POL B	M5	25÷35	Cu-Sn	1,5			1705925	800
	MIDI POL C	M5	10÷20	Cu-Sn	1,5			1705835	1000
	MIDI POL D	M5	10÷20	Cu-Sn	1,5			1705856	1000
3	MIDI G10 POL B	M5	6÷8	CuZn-Sn	1			1705726	2700
4	MIDI G10 POL A	M5	10÷20	CuZn-Sn	1,5			1705816	1000
	MIDI G10 POL B	M5	10÷20	CuZn-Sn	1,5			1705826	1000
	MIDI G10 POL D	M5	10÷20	CuZn-Sn	1,5			1705846	1000
5	MIDI G135 POL A	M5	10÷20	CuZn-Sn	1,5	1605815	1500		

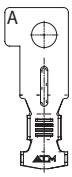

POL A

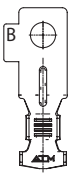

POL B

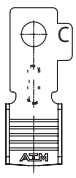

POL C

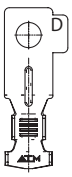

POL D

MIDI G90

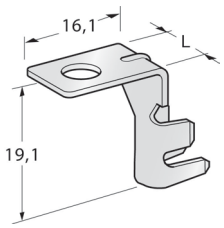

1

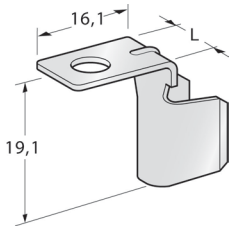

2

IMG	DESCRIPTION	SCREW	WIRE SECTION mm²	MATERIAL	MATERIAL THICKNESS mm	L		P/N BOX	M.O.Q.
1	MIDI G90 UNI	M5	2,5÷4	Cu-Sn	0,8	10		1605600	2500
	MIDI G90 UNI	M5	6÷8	Cu-Sn	0,8	10		1605700	2500
	MIDI G90 POL A	M5	2,5÷4	Cu-Sn	0,8	10		1605610	2500
	MIDI G90 POL A	M5	6÷8	Cu-Sn	0,8	10		1605710	2000
	MIDI G90 POL B	M5	2,5÷4	Cu-Sn	0,8	10		1605620	2500
	MIDI G90 POL B	M5	6÷8	Cu-Sn	0,8	10		1605720	2000
	MIDI G90 POL C	M5	2,5÷4	Cu-Sn	0,8	10		1605630	2500
	MIDI G90 POL C	M5	6÷8	Cu-Sn	0,8	10		1605730	2000
	MIDI G90 POL E	M5	2,5÷4	Cu-Sn	0,8	10		1605650	2500
2	MIDI G90 UNI	M5	10÷20	Cu-Sn	1,5	10		1605800	1500
	MIDI G90 UNI	M5	25÷35	Cu-Sn	1,5	10		1605900	2000
	MIDI G90 POL A	M5	10÷20	Cu-Sn	1,5	10		1605810	1500
	MIDI G90 POL A	M5	25÷35	Cu-Sn	1,5	10		1605910	2000
	MIDI G90 POL B	M5	10÷20	Cu-Sn	1,5	10		1605820	1500
	MIDI G90 POL C	M5	10÷20	Cu-Sn	1,5	10		1605830	1500
	MIDI G90 POL C	M5	25÷35	Cu-Sn	1,5	10		1605930	2000
	MIDI G90 POL A	M6	10÷20	Cu-Sn	1,5	13		1605811	1200
	MIDI G90 POL C	M6	25÷35	Cu-Sn	1,5	13		1605911	1000

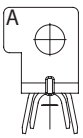

POL A

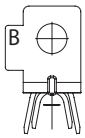

POL B

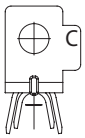

POL C

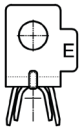

POL E

REVERSIBLE

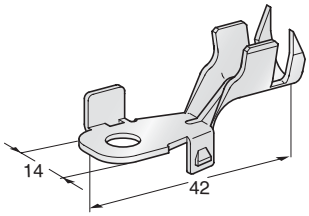

1

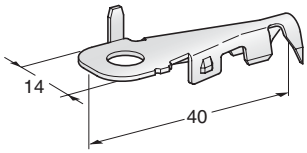

2

IMG	DESCRIPTION	SCREW	WIRE SECTION mm²	MATERIAL	MATERIAL THICKNESS mm	L	P/N REEL	M.O.Q.
1	RVS A	M6	2,5÷4	Cu-Sn	0,8		1706900	1500
	RVS A	M6	6÷8	Cu-Sn	1		1706910	1400
	RVS A	M6	10÷16	Cu-Sn	1,2		1706920	1200
2	RVS B	M6	2,5÷4	Cu-Sn	0,8		1706930	2200
	RVS B	M6	6÷8	Cu-Sn	1		1706940	2000

SQUARE

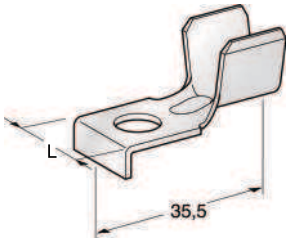

1

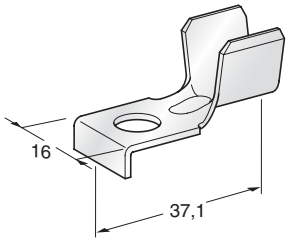

2

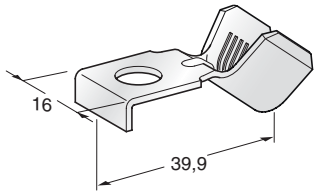

3

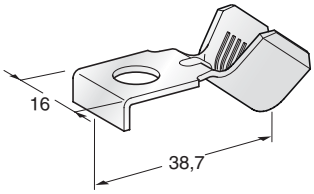

4

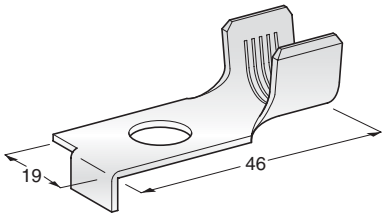

5

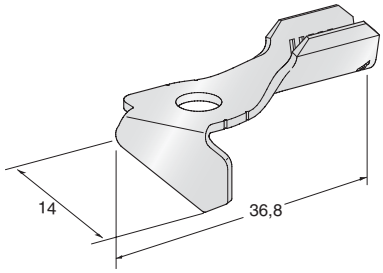

6

IMG	DESCRIPTION	L	SCREW	WIRE SECTION mm²	MATERIAL	MATERIAL THICKNESS mm	P/N BOX	M.O.Q.	P/N REEL	M.O.Q.
1	SQR A	12	M5	10÷20	CuZn-Sn	1,2			1706990	1200
	SQR A	16	M6	10÷20	CuZn-Sn	1,2	1906970	1000	1706970	1200
	SQR A	16	M6	25÷35	CuZn-Sn	1,2			1706980	1000
	SQR A	16	M6	25÷40	CuETP-Sn	1,5	1606981	1800		
	SQR A	16	M8	10÷20	CuZn-Sn	1,2			1706950	1200
	SQR A	16	M8	10÷20	CuZn-Sn	1,5	1606991	1700		
	SQR A	16	M8	25÷35	CuZn-Sn	1,2			1706960	1000
	SQR A	16	M8	25÷40	CuZn-Sn	1,5	1606990	800		
2	SQR A		M8	25÷40	CuZn-Sn	1,5	1606992	800		
3	SQR A G45		M8	25÷40	CuZn-Sn	1,5	1606994	900		
4	SQR A G40		M6	25÷40	CuZn-Sn	1,2	1606982	2000		
5	SQR B		M10	10÷20	CuZn-Sn	1,5			1708220	800
	SQR B		M10	25÷35	CuZn-Sn	1,5			1708200	700
6	SQR 30		M6	10÷20	CuZn-Sn	1,2	1608345	1000	1708345	1000
	SQR 30		M6	25÷40	CuZn-Sn	1,2	1608346	800		

SQUARE

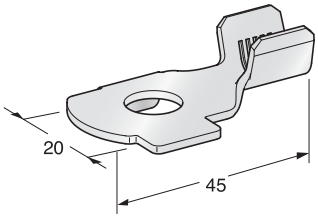

1

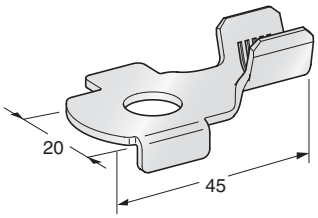

2

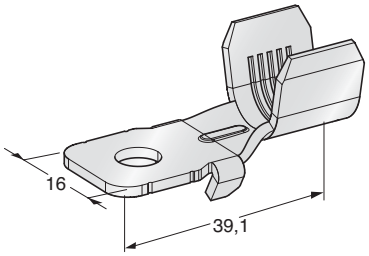

3

IMG	DESCRIPTION	SCREW	WIRE SECTION mm²	MATERIAL	MATERIAL THICKNESS mm		P/N REEL	M.O.Q.
1	SQR C DX	M10	10÷20	CuZn-Sn	1,5		1708185	700
2	SQR C SX	M10	25÷40	CuZn-Sn	1,5		1708270	700
3	SQR C MY03	M6	10÷20	CuZn-Sn	1,5		1706975	1200
	SQR C MY03	M6	25÷40	CuZn-Sn	1,5		1706977	1000

SMT

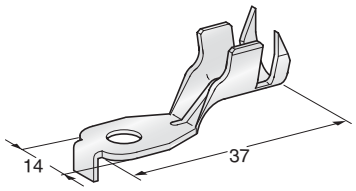

1

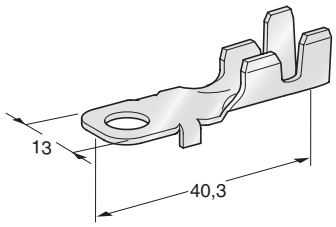

2

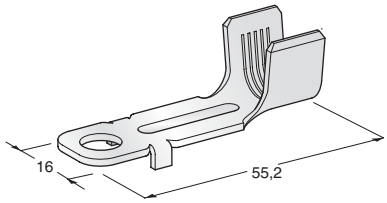

3

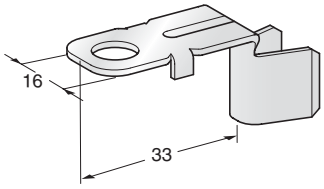

4

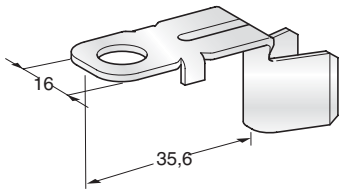

5

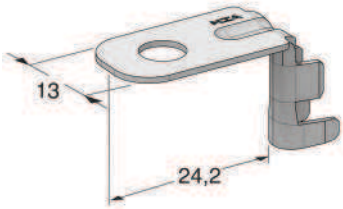

6

IMG	DESCRIPTION	SCREW	WIRE SECTION mm²	MATERIAL	MATERIAL THICKNESS mm	P/N BOX	M.O.Q.	P/N REEL	M.O.Q.
1	SMT A	M6	4÷8	CuZn-Sn	1			1706880	1400
	SMT A	M6	10÷16	CuZn-Sn	1,2	1606890	2000	1706890	1200
2	SMT B	M6	2,5÷4	CuZn-Sn	0,8			1706600	3000
3	SMT C	M8	50÷70	CuZn-Sn	1,5	1606796	1000		
4	SMT C G90	M6	6÷8	CuZn-Sn	1,2	1606775	500		
	SMT C G90	M6	10÷20	CuZn-Sn	1,2	1606770	2000		
	SMT C G90	M6	25÷40	CuZn-Sn	1,2	1606500	600		
	SMT C G90	M8	25÷40	CuZn-Sn	1,2	1606785	600		
5	SMT C G90	M8	50÷70	CuZn-Sn	1,5	1606795	1000		
6	SMT B G90	M8	2,5÷4	CuZn-Sn	0,8	1606791	2000		

SPECIAL TYPES

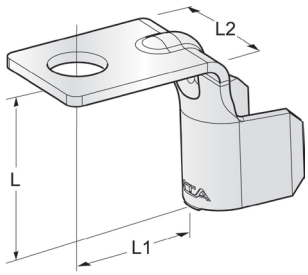

1

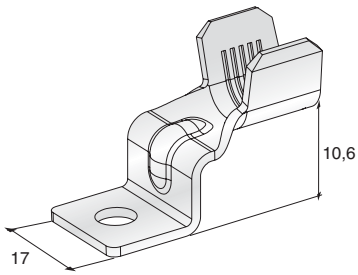

2

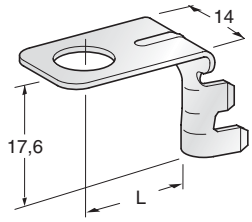

3

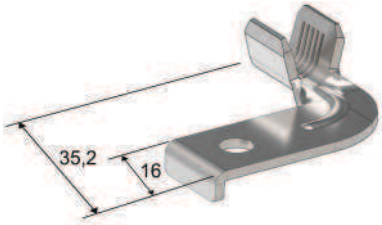

4

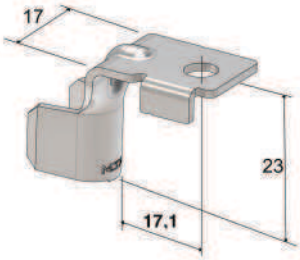

5

IMG	DESCRIPTION	SCREW	WIRE SECTION mm²	MATERIAL	MATERIAL THICKNESS mm	L	L1	L2	P/N BOX	M.O.Q.
1	FDU G90	M8	25÷40	CuZn-Sn	1,5	23	10,7	17	1608380	1500
	FDU G90	M6	25÷40	CuZn-Sn	1,5	23	10,7	17	1608381	700
	FDU G90	M6	25÷35	Cu-Sn	1,5	27,4	10,7	17	1608384	600
	G90	M8	50 -70	Cu-Sn	1,8	23	16	16	1607500	600
	G90	M8	M8	Cu-Sn	1,8	24	16	16	1617500	600
2	FDU G90	M6	25÷40	CuZn-Sn	1,5				1608382	700
3	PTC G90	M8	2,5÷4	Cu-Sn	0,8	15,4,			1608500	1700
	STR-S G90	M6	2,5÷4	Cu-Sn	0,8	11,4			1608510	2300
4	SX FL90 P	M6	10÷16	CuZn-Sn	1,8				1704004	600
5	FDU GM90M6P	M6	25÷35	CuZn-Sn	1,5				1704010	600

SPECIAL TYPES

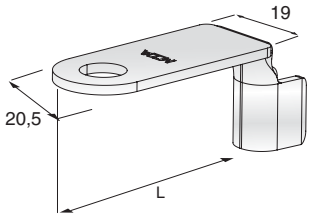

1

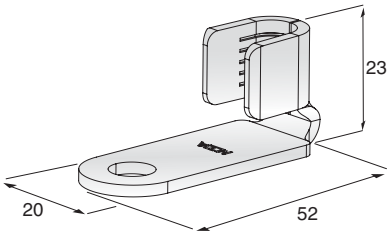

2

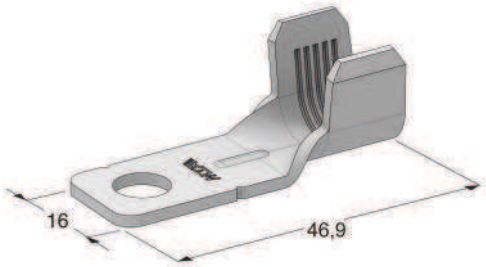

3

IMG	DESCRIPTION	SCREW	WIRE SECTION mm²	MATERIAL	MATERIAL THICKNESS mm	L		P/N BOX	M.O.Q.
1	G90	M8	16	CuZn-Sn	1,9	44,5		1793752	500
	G90	M8	16	CuZn-Sn	1,9	54,5		1796416	2000
2	G90	M8	35	CuZn-Sn	2,3			1793753	500
3	L47	M8	50 -70	Cu-Sn	1,8			1607510	600

NUT TYPES

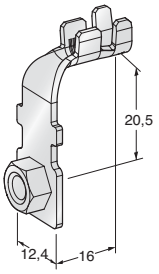

1

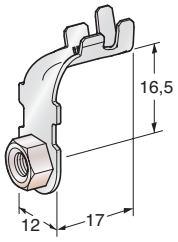

2

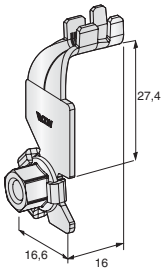

3

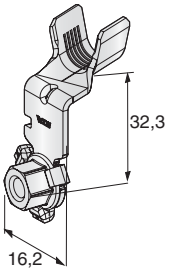

4

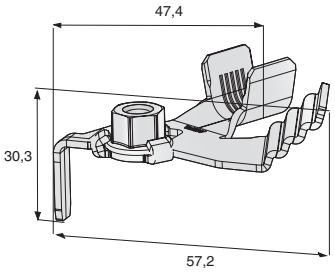

5

IMG	DESCRIPTION	SCREW	WIRE SECTION mm²	MATERIAL	MATERIAL THICKNESS mm		P/N BOX	M.O.Q.
1	NUT G90 SH	M5	2,5÷5	CuZn-Sn	1,2		1608420	1500
2	NUT G90	M5	2,5÷5	CuZn-Sn	1		1608400	1500
3	W95 G90	M5	2,5÷5	CuZn-Sn	1,2		1608470	800
4	STARTER W95 G90	M6	25÷40	CuZn-Sn	1,5		1608450	500
5	JUMP START W95	M6	25÷40	CuZn-Sn	1,5		1608460	230

SPECIAL TYPES

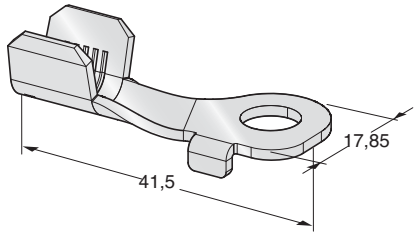

1

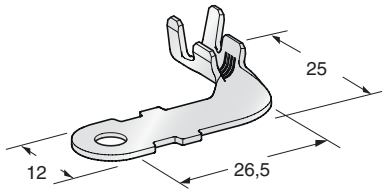

2

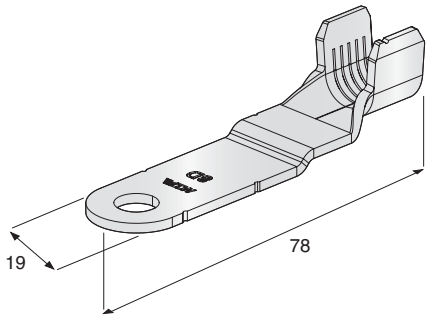

3

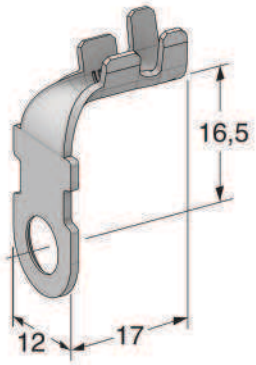

4

IMG	DESCRIPTION	SCREW	WIRE SECTION mm²	MATERIAL	MATERIAL THICKNESS mm	P/N BOX	M.O.Q.	P/N REEL	M.O.Q.
1	STARTER L41	M8	10÷20	CuZn-Sn	1,5			1708360	1000
	STARTER L41	M8	25÷40	CuZn-Sn	1,5			1708370	800
2	X70 FL90	M5	4÷7	CuZn-Sn	1	1608415	3000		
3	ALTERNATOR	M8	35÷50	Cu-Sn	2	1607400	300		
4	G90	M6	2,5÷5	CuZn-Sn	1	1606995	2000		

SPECIAL TYPES

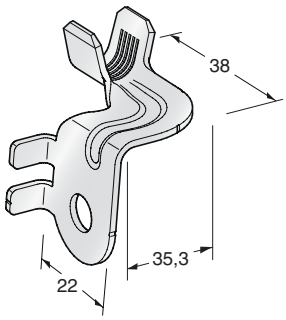

1

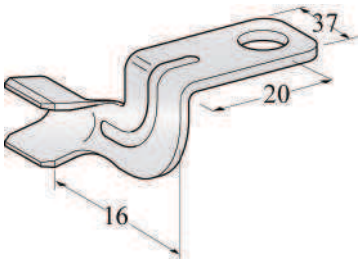

2

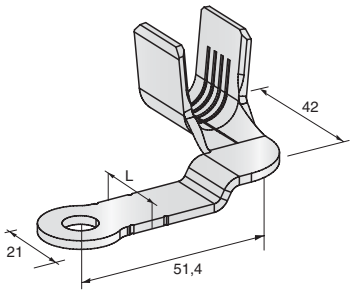

3

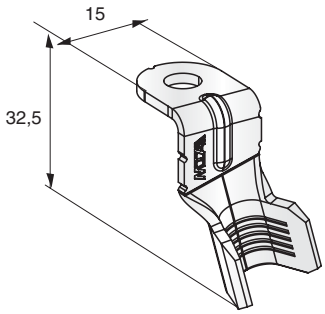

4

IMG	DESCRIPTION	SCREW	WIRE SECTION mm²	MATERIAL	MATERIAL THICKNESS mm	L		P/N BOX	M.O.Q.
1	ND TW90	M8	25÷40	CuZn-Sn	1,5			1609100	280
2	FLANGE TW90	M8	10÷20	CuZn-Sn	1,5			1608600	450
	FLANGE TW90	M8	25÷35	CuZn-Sn	1,5			1608700	1500
3	D21	M8	16÷41	CuZn-Sn	2	16		1609910	380
	D21	M8	14÷41	CuZn-Sn	2	13		1609920	250
	D21	M8	16÷41	Cu-Sn	2	16		1609911	250
4	FL15G90	M6	25÷35	Cu-Sn	1,8			1608520	700

SPECIAL TYPES

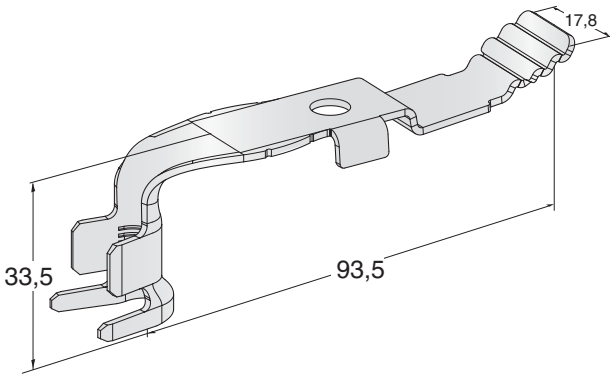

1

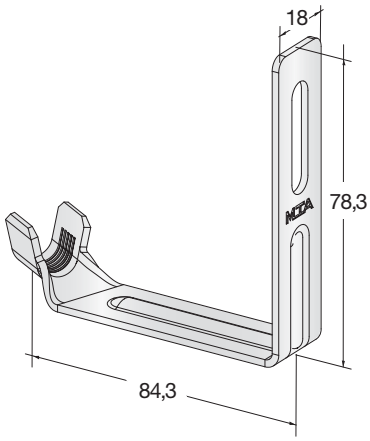

2

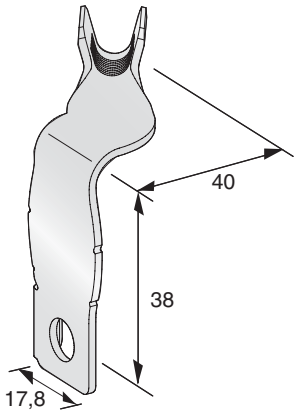

3

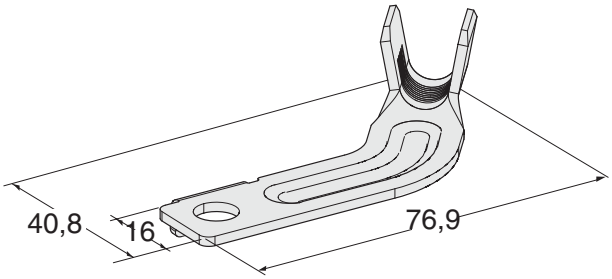

4

IMG	DESCRIPTION	SCREW	WIRE SECTION mm²	MATERIAL	MATERIAL THICKNESS mm		P/N BOX	M.O.Q.
1	W84 G90	M8	25÷41	CuZn-Sn	1,5		1609400	350
2	SLOT G90	M8	25÷40	CuZn-Sn	1,8		1609500	300
3	W84 TW90	M8	10÷25	Cu-Sn	1,5		1608911	800
4	W61 FLAG 50	M8	25	CuZn-Sn	1,8		1609600	500

SPECIAL TYPES

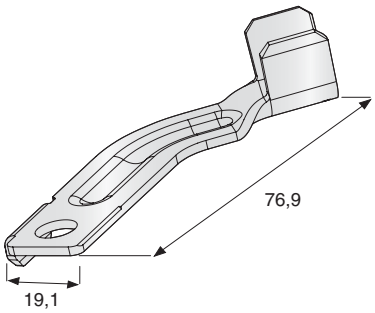

1

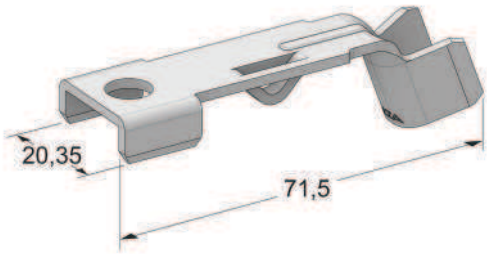

2

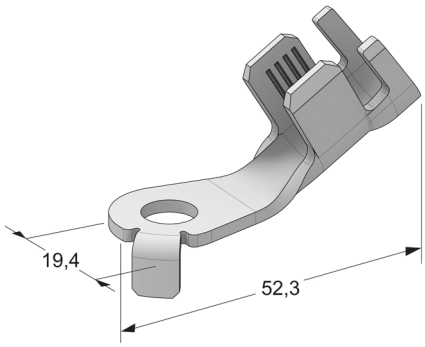

3

IMG	DESCRIPTION	SCREW	WIRE SECTION mm²	MATERIAL	MATERIAL THICKNESS mm		P/N BOX	M.O.Q.
1	W62 FLAG 50	M8	25÷40	CuZn-Sn	1,8		1609310	300
2	G70	M8	25÷35	CuZn-Sn	1,8		1608540	500
3	G30 ANTIROTATION	M8	35	CuZn-Sn	2,0		1609960	500

TUBOLAR

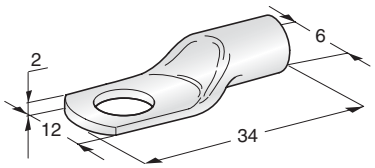

1

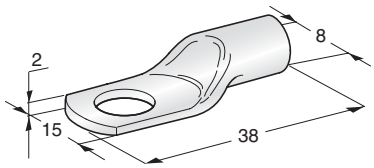

2

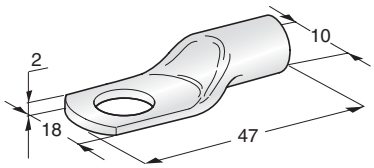

3

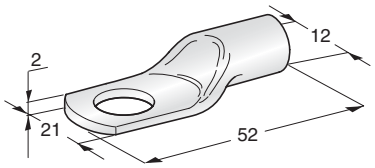

4

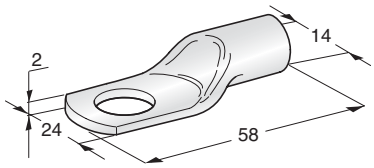

5

IMG	DESCRIPTION	SCREW	WIRE SECTION mm²	MATERIAL		P/N BOX	M.O.Q.
1	TUBOLAR L34	M6	16	Cu-Sn		1605000	50
	TUBOLAR L34	M8	16	Cu-Sn		1605100	50
2	TUBOLAR L38	M8	25	Cu-Sn		1605010	50
	TUBOLAR L38	M10	25	Cu-Sn		1605110	50
3	TUBOLAR L47	M8	35	Cu-Sn		1605021	50
	TUBOLAR L47	M10	35	Cu-Sn		1605020	50
4	TUBOLAR L52	M11	50	Cu-Sn		1605030	25
5	TUBOLAR L58	M13	75	Cu-Sn		1605040	25

HP6 280

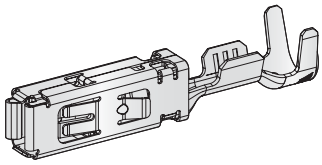

1

IMG	DESCRIPTION	WIRE SECTION mm²	MATERIAL	MATERIAL THICKNESS mm	CONTACT AREA COATING	P/N BOX	M.O.Q.	P/N REEL	M.O.Q.
1	HP6 280	0,5÷1	Cu Alloy-Sn	0,3	Au	1108380	100	1708380	10500
	HP6 280	1,5÷2,5	Cu Alloy-Sn	0,3	Au	1108381	100	1708381	10500
	HP6 280	0,5÷1	Cu Alloy-Sn	0,3	Sn	1108382	100	1708382	10500
	HP6 280	1,5÷2,5	Cu Alloy-Sn	0,3	Sn	1108383	100	1708383	10500
	HP6 280	0,5÷1	Cu Alloy-Sn	0,3	Ag			1708391	10500
	HP6 280	1,5÷2,5	Cu Alloy-Sn	0,3	Ag			1708392	10500

MINI 280

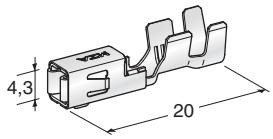

1

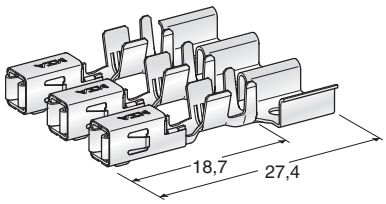

2

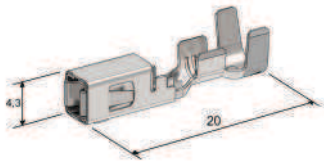

3

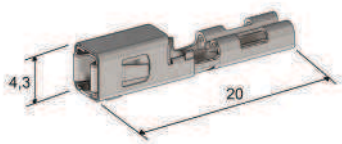

4

5

6

IMG.	DESCRIPTION	WIRE SECTION mm²	WIRE DIAMETER Ømm	MATERIAL	MAT. THICK. mm	TAB / COLOUR	P/N BOX	M.O.Q.	P/N REEL	M.O.Q.
1	MINI F280	0,35÷0,75		CuFe-Sn	0,3		1108330	100	1708330	9000
	MINI F280	1÷2		CuFe-Sn	0,3		1108331	100	1708331	9000
	MINI F280	2,5÷4		CuFe-Sn	0,3		1108332	100	1708332	9000
2	MINI F280 BUS BAR	1÷2		CuFe-Sn	0,3				1708335	12000
	MINI F280 BUS BAR	2,5÷4		CuFe-Sn	0,3				1708336	12000
3	MINI F280 WP	0,35÷0,75		CuFe-Sn	0,3		1108337	100	1708337	9000
	MINI F280 WP	1÷2		CuFe-Sn	0,3		1108338	100	1708338	9000
	MINI F280 WP	2,5÷4		CuFe-Sn	0,3		1108339	100	1708339	9000
4	MINI F280 DOUBLE			CuFe-Sn		Male 2,8	1708334	20000		
5	GASKET		2,2÷3	Silicon		Green	4551747	100	4550747box	10000
	GASKET		1,2÷2,1	Silicon		Red	4551748	100	4550748box	10000
	GASKET		3,1÷3,7	Silicon		Grey	4551749	100	4550749box	10000
6	PLUG			Silicon		Black			4550750box	5000

F 480E

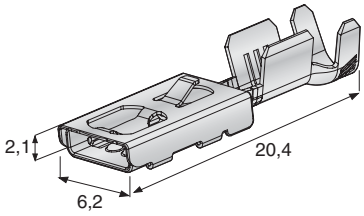

1

IMG	DESCRIPTION	WIRE SECTION mm²	MATERIAL	MATERIAL THICKNESS mm	P/N BOX	M.O.Q.	P/N REEL	M.O.Q.
1	F480E	0,5÷1	CuZn-Sn	0,3	1108400	100	1708400	15000
	F480E	1,5÷2,5	Cu Alloy-Sn	0,3	1108401	100	1708401	12000
	F480E	0,35÷0,5	CuZn-Sn	0,3	1108402	100	1708402	16500

F630E & M630

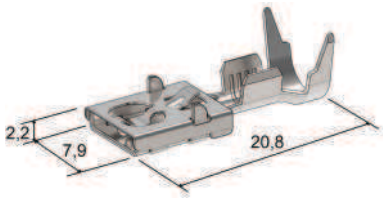

1

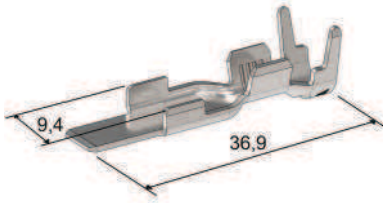

2

3

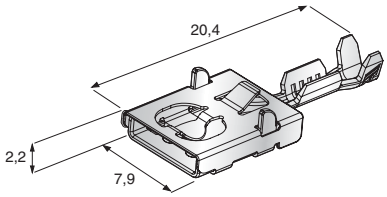

4

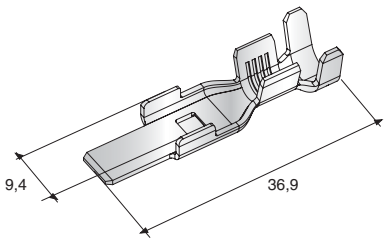

5

IMG.	DES.	WIRE SECTION mm²	WIRE DIAMETER Ømm	MATERIAL	MATERIAL THICKNESS mm	TAB	COLOUR	P/N BOX	M.O.Q.	P/N REEL	M.O.Q.
1	F630 E WP	2÷3		Cu Alloy-Sn	0,4	6,3 x 0,8				1708505	5400
	F630 E WP	4÷6		Cu Alloy-Sn	0,4	6,3 x 0,8				1708504	5400
2	M630 WP	2,5÷4		Cu-Sn	0,8					1707995	1700
	M630 WP	6		Cu-Sn	0,8					1707994	1700
3	GASKET		2,7÷3,7	Silicon			Blue	4551901	10000		
	GASKET		4÷4,3	Silicon			Green	4551902	10000		
4	F630 E	0,35÷0,5		CuZn-Sn	0,4	6,3 x 0,8		1108500	100	1708500	10500
	F630 E	0,75÷1,5		CuZn-Sn	0,4	6,3 x 0,8		1108501	100	1708501	9000
	F630 E	2÷3		Cu Alloy-Sn	0,4	6,3 x 0,8		1108502	100	1708502	7500
	F630 E	4÷6		Cu Alloy-Sn	0,4	6,3 x 0,8		1108503	100	1708503	6300
	F630 E	0,35÷0,5		CuZn-Sn	0,4	5,2 x 0,6		1108510	100	1708510	TBD
	F630 E	0,75÷1,5		CuZn-Sn	0,4	5,2 x 0,6		1108511	100	1708511	9000
	F630 E	2÷2,5		Cu Alloy-Sn	0,4	5,2 x 0,6		1108512	100	1708512	7500
	F630 E	4÷6		Cu Alloy-Sn	0,4	5,2 x 0,6		1108513	100	1708513	6300
5	M630	1,5÷2		Cu-Sn	0,8			1107990	20	1707990	3000
	M630	2,5÷4		Cu-Sn	0,8			1107991	20	1707991	2000
	M630	6÷8		Cu-Sn	0,8			1107992	20	1707992	1900
	M630	10		Cu-Sn	0,8			1107993	20	1707993	1700

UNI 630

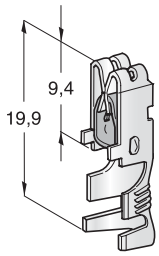

1

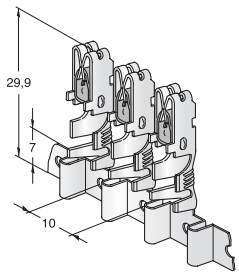

2

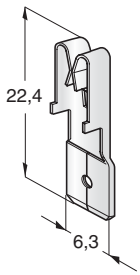

3

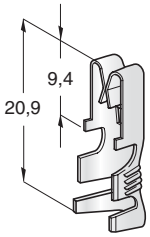

4

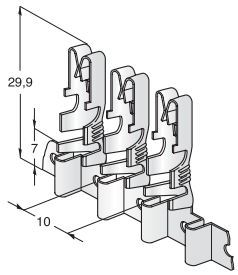

5

IMG	DESCRIPTION	WIRE SECTION mm²	MATERIAL	MATERIAL THICKNESS mm	P/N BOX	M.O.Q.	P/N REEL	M.O.Q.
1	UNI F630 WITH CLIP	0,5÷1,5	CuSn-Sn	0,4	1107920	100	1707920	6000
	UNI F630 WITH CLIP	2÷3	CuSn-Sn	0,4	1107930	100	1707930	6000
	UNI F630 WITH CLIP	4÷6	CuNi-Sn	0,4	1107940	50	1707940	5400
2	UNI F630 BUS BAR WITH CLIP	2÷3	CuSn-Sn	0,4			1707932	9000
	UNI F630 BUS BAR WITH CLIP	4÷6	CuNi-Sn	0,4			1707942	9000
3	UNI F630		CuSn-Sn	0,4	1107501	100	1907501box	8000
4	UNI F630	0,5÷1,5	CuSn-Sn	0,4	1107900	100	1707900	6000
	UNI F630	2÷3	CuSn-Sn	0,4			1707902	6000
	UNI F630	4÷6	CuSn-Sn	0,4	1107901	100	1707901	5400
5	UNI F630 BUS BAR	2÷3	CuSn-Sn	0,4			1707912	9000
	UNI F630 BUS BAR	4÷6	CuSn-Sn	0,4			1707911	9000

MAXI 800 WP

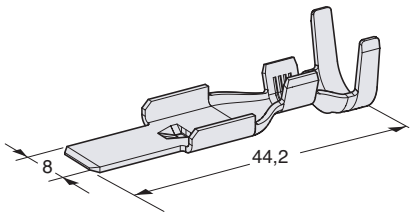

1

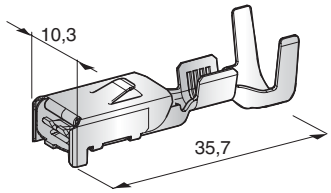

2

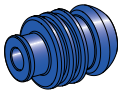

3

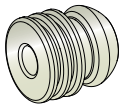

4

IMG	DESCRIPTION	WIRE SECTION mm²	WIRE DIAMETER Ømm	MATERIAL	MATERIAL THICKNESS mm	COLOUR	P/N BOX	M.O.Q.	P/N REEL	M.O.Q.
1	WP M800	2,5÷4		Cu-Sn	0,8		1107760	20	1707760	1300
	WP M800	6÷8		Cu-Sn	0,8		1107770	20	1707770	1000
	WP M800	10÷16		Cu-Sn	0,8				1707780	1300
2	WP F800	1,5 ÷ 2,5		CuZn-Sn	0,5		1107400	20	1707400	1300
	WP F800	3 ÷ 6		CuZn-Sn	0,5		1107410	20	1707410	1300
	WP F800	7 ÷ 10		CuNi-Sn	0,5		1107420	20	1707420	1300
3	GASKET		1,9 - 3,3	SILICON		Green	4550780	5000		
	GASKET		3,4 - 4,9	SILICON		Blue	4550781	5000		
	GASKET		5 - 6,5	SILICON		Red	4550782	5000		
4	CAVITY PLUG			SILICON		Natural	4550784	5000		

MAXI 800

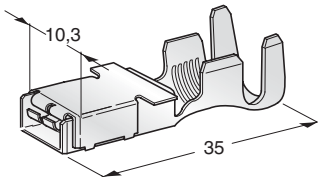

1

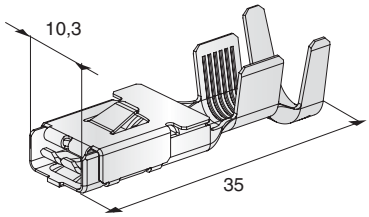

2

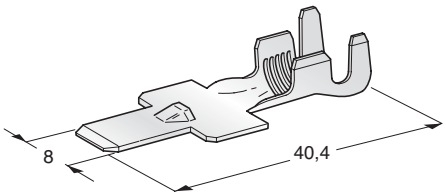

3

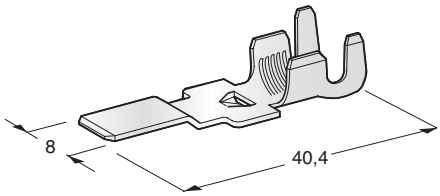

4

IMG	DESCRIPTION	WIRE SECTION mm²	MATERIAL	MATERIAL THICKNESS mm	P/N BOX	M.O.Q.	P/N REEL	M.O.Q.
1	F800	1,5÷2,5	CuZn-Sn	0,5	1107650	20	1707650	1600
	F800	4÷6	CuZn-Sn	0,5	1107660	20	1707660	1600
	F800	8÷10	CuZn-Sn	0,5	1107670	20	1707670	1300
	F800	8÷10	CuNi-Sn	0,5			1707672	1300
	F800	16	CuNi-Sn	0,5	1107671	20	1707671	1300
2	F800 WITH CLIP	1,5÷2,5	CuZn-Sn	0,5			1707620	2000
	F800 WITH CLIP	4÷6	CuZn-Sn	0,5			1707621	2000
	F800 WITH CLIP	8÷10	CuNi-Sn	0,5			1707622	1300
3	M800	2,5÷4	Cu-Sn	0,8	1107675	20	1707675	2000
	M800	6÷8	Cu-Sn	0,8	1107685	20	1707685	1600
	M800	10÷16	Cu-Sn	0,8	1107690	20	1707690	1300
4	WP M800	2,5÷4	Cu-Sn	0,8	1107700	20	1707700	2000
	WP M800	6÷8	Cu-Sn	0,8	1107710	20	1707710	1600
	WP M800	10÷16	Cu-Sn	0,8	1107720	20	1707720	1400

POWER 950

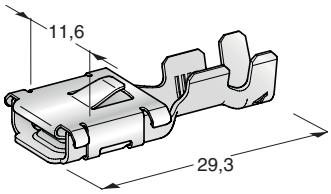

1

IMG	DESCRIPTION	WIRE SECTION mm²	MATERIAL	MATERIAL THICKNESS mm	P/N BOX	M.O.Q.	P/N REEL	M.O.Q.
1	F950	2,5÷4	Cu-Sn	0,6	1107740	20	1707740	2000
	F950	6÷8	Cu-Sn	0,6	1107741	20	1707741	1600
	F950	10÷16	Cu-Sn	0,6			1707742	1300

FASTON

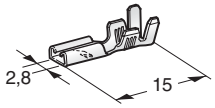

1

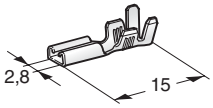

2

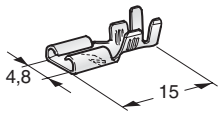

3

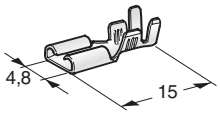

4

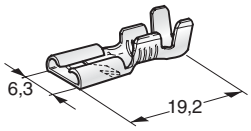

5

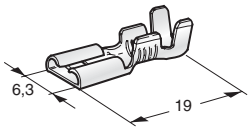

6

IMG	DESCRIPTION	WIRE SECTION mm²	MATERIAL THICKNESS mm	MATERIAL	P/N BOX	M.O.Q.	P/N BOX	M.O.Q.	P/N REEL	M.O.Q.
1	F280 WITH LOCKING NOTCH	0,5÷1	0,25	CuZn-Sn	1101700	200				
2	F280	0,3÷1	0,30	CuZn	1301390	2000	1901390	10000		
3	F480 WITH LOCKING NOTCH	0,5÷1	0,32	CuZn-Sn	1101710	100				
4	FASTON F480	0,5÷1	0,33	CuZn	1301391	100	1901391	10000		
5	F630 WITH LOCKING NOTCH	1÷2,5	0,35	CuZn	1301650	5000	1901650	8000		
	F630 WITH LOCKING NOTCH	1÷2,5	0,35	CuZn-Sn	1101650	5000	1911650	8000	1701650	15000
	F630 WITH LOCKING NOTCH	2,5÷6	0,35	CuZn-Sn					1701651	3000
6	F630	0,5÷1,5	0,40	CuZn	1301402	100	1901402	5000		
	F630	1÷2,5	0,35	CuZn-Sn					1701655	15000
	F630	1÷2,5	0,40	CuZn	1301400	10000	1901400	8000	1401400	15000
	F630	1÷2,5	0,40	CuZn-Sn	1101400	200	1911400	8000	1701400	15000

FASTON

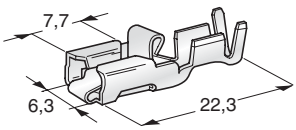

1

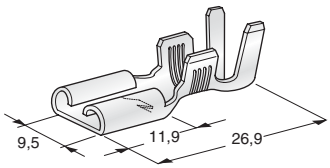

2

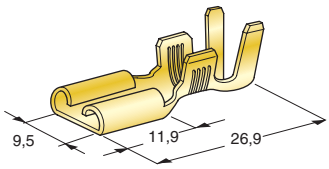

3

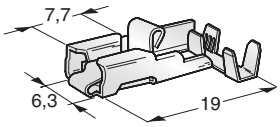

4

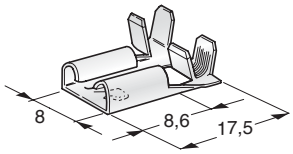

5

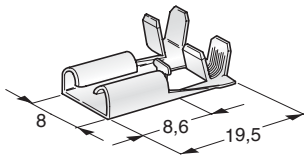

6

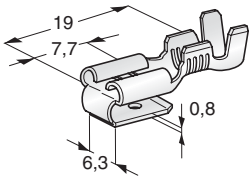

7

IMG	DESCRIPTION	WIRE SECTION mm²	MATERIAL THICKNESS mm	MATERIAL	P/N BOX	M.O.Q.	P/N REEL	M.O.Q.
1	ANTISF F630	0,5÷1,5	0,4	CuZn-Sn	1107000	50		
	ANTISF F630	2,5÷4	0,4	CuZn-Sn	1107010	50		
2	F950 WITH LOCKING NOTCH	6÷10	0,4	CuZn-Sn	1101720	100		
3	F950	3÷6	0,4	CuZn	1301420	100	1901420box	3000
4	ANTISF F630 FLAG	1÷2,5	0,4	CuZn-Sn	1107020	50		
5	F800 FLAG WITH LOCKING NOTCH	1÷2,5	0,4	CuZn-Sn	1101680	50		
6	F800 FLAG	1÷2,5	0,4	CuZn-Sn			1951145box	1000
7	630 2WAY	0,8÷2,5	0,4	CuZn-Sn	1301501	100	1901501box	5000

FASTON

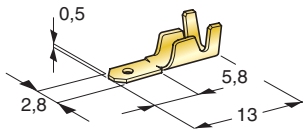

1

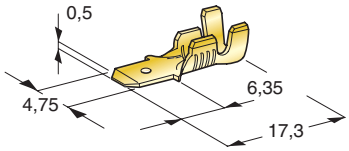

2

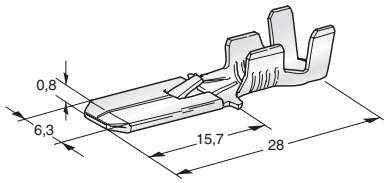

3

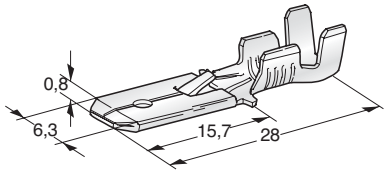

4

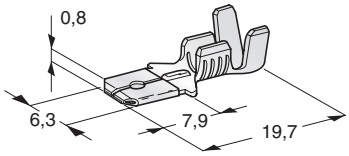

5

IMG	DESCRIPTION	WIRE SECTION mm²	MATERIAL THICKNESS mm	MATERIAL	P/N BOX	M.O.Q.	P/N REEL	M.O.Q.
1	M280	0,5÷1	0,5	CuZn	1301418	200	1901418box	5000
2	M480	0,3÷1	0,5	CuZn	1301417	200	1901417box	5000
3	M630 WITH LOCKING NOTCH	0,75÷2	0,4	CuZn-Sn	1101660	100	1701660	3500
	M630 WITH LOCKING NOTCH	0,75÷2	0,4	CuZn	1301660	5000		
	M630 WITH LOCKING NOTCH	0,75÷2	0,4	CuZn	1901660	5000		
	M630 WITH LOCKING NOTCH	4÷6	0,4	CuZn-Sn	1101662	100		
4	M630 WITH LOCKING NOTCH	1÷2,5	0,4	CuZn	1301665	100	1901665box	5000
5	M630	0,5÷1	0,4	CuZn	1301411	100	1901411box	5000
	M630	1÷2,5	0,4	CuZn-Sn	1101412	100	1701412	5000
	M630	1÷2,5	0,4	CuZn-Sn	1951194	5000		
	M630	1÷2,5	0,4	CuZn	1301412	100	1901412box	5000

FOR SEAL CONNECTORS

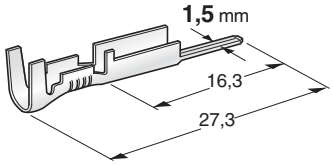

1

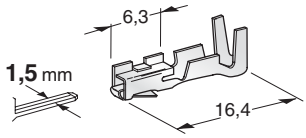

2

3

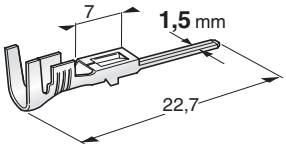

4

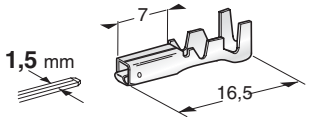

5

6

7

IMG	DESCRIPTION	WIRE SECTION mm²	MATERIAL THICKNESS mm	MATERIAL	COLOUR	P/N BOX	M.O.Q.	P/N REEL	M.O.Q.
1	METRIPACK M150	0,5÷1	0,4	CuZn-Sn		1105510	100		
2	METRIPACK F150	0,5÷1	0,4	CuZn-Sn		1105500	100		
3	RUBBER	0,5÷1	-	Silicon	Red	4407530	100		
4	S-SEAL M150	1÷1,5	0,32	CuZn-Sn		1105550	100	1705550	4000
5	S-SEAL F150	1÷1,5	0,3	CuZn-Sn		1105560	100	1705560	4000
6	RUBBER	0,5÷1	-	Silicon	Yellow	4407740	100	4507740box	10000
7	CAVITY PLUG		-	Silicon	Red	4407750	100		

FOR SEAL CONNECTORS

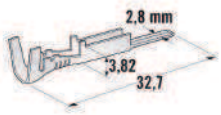

1

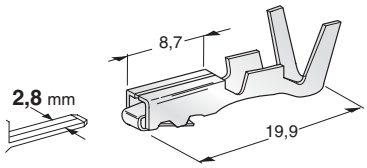

2

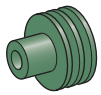

3

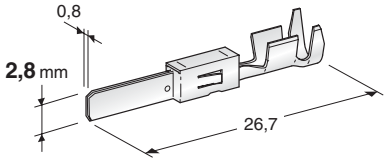

4

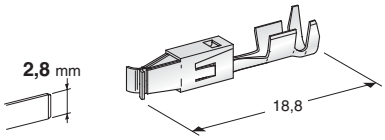

5

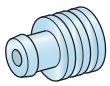

6

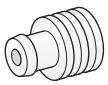

7

IMG	DESCRIPTION	WIRE SECTION mm²	MATERIAL THICKNESS mm	MATERIAL	COLOUR	P/N BOX	M.O.Q.	P/N REEL	M.O.Q.
1	METRIPACK M280	1÷2,5	0,4	CuSn-Sn		1104500	50	1704500	3500
2	METRIPACK F280	1÷2,5	0,4	CuSn-Sn		1104510	100	1704510	3200
3	RUBBER	1÷2,5		Silicon	Green	4407510	100	4507510box	5000
4	JPT-WP M280	0,5÷1,5	0,32	CuSn-Sn		1108290	100		
	JPT-WP M280	1,5÷2,5	0,32	CuSn-Sn		1108300	100		
5	JPT-WP F280	0,5÷1	0,32	CuSn-Sn		1108260	100		
	JPT-WP F280	1÷2,5	0,32	CuSn-Sn		1108270	100		
6	RUBBER	0,5÷1		Silicon	Azure	4510662	100		
7	RUBBER	1,5÷2,5		Silicon	White	4510658	100		

FOR SEAL CONNECTORS

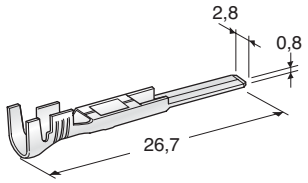

1

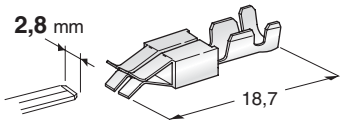

2

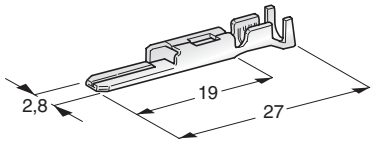

3

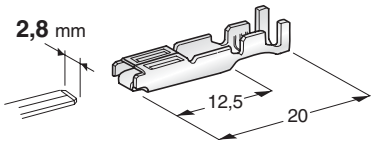

4

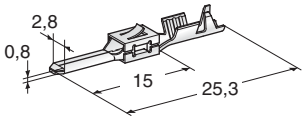

5

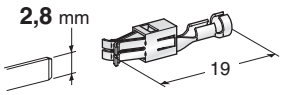

6

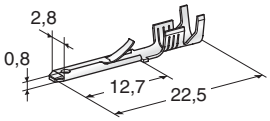

7

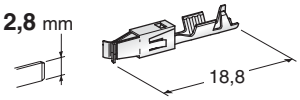

8

IMG	DESCRIPTION	WIRE SECTION mm²	MATERIAL THICKNESS mm	MATERIAL	P/N BOX	M.O.Q.
1	JT M280	0,35÷1	0,32	CuSn-Sn	1108280	100
2	JT F280	0,5÷1,5	0,32	CuSn-Sn	1107210	200
	JT F280	1,5÷2,5	0,32	CuSn-Sn	1107211	100
3	MARK II M280	0,5÷1,5	0,40	CuSn-Sn	1102010	200
4	MARK II F280	0,5÷1,5	0,40	CuSn-Sn	1102000	100
5	M280	0,5÷1	0,30	CuFe-Sn	1108030	50
6	F280	0,5÷1	0,30	CuFe-Sn	1108050	100
7	DIN 46343 FOR CAR RADIO	0,5÷1	0,38	CuSn-Sn	1108060	100
8	JPT F280	0,2÷0,5	0,32	CuSn-Sn	1105615	100
	JPT F280	0,5÷1	0,32	CuSn-Sn	1105620	100
	JPT F280	1,5÷2,5	0,32	CuSn-Sn	1105630	100

FOR SEAL CONNECTORS

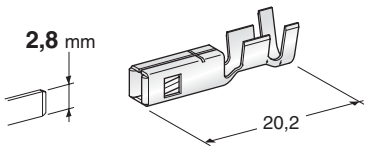

1

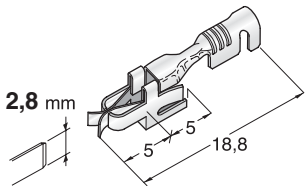

2

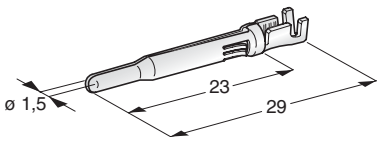

3

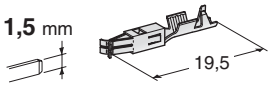

4

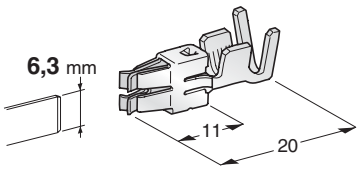

5

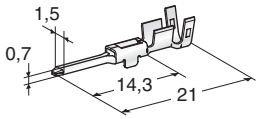

6

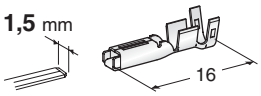

7

IMG	DESCRIPTION	WIRE SECTION mm²	MATERIAL THICKNESS mm	MATERIAL	P/N BOX	M.O.Q.
1	SICMA2 F280	0,35÷0,75	0,35	CuZn-Sn	1105660	100
	SICMA2 F280	1÷2,5	0,35	CuZn-Sn	1105670	100
2	JPT F280	0,5÷1	0,40	CuZn-Sn	1107209	100
	JPT F280	1,5÷2,5	0,40	CuZn-Sn	1107212	100
3	MFS M150	0,5÷1	0,30	CuZn-Sn	1108010	100
4	MKF F150	0,5÷1	0,30	CuZn-Sn	1108020	100
5	SPT F630	2,5÷4	0,40	CuZn-Sn	1102050	100
6	070 M150	0,75÷1,5	0,30	CuZn-Sn	1108080	100
7	070 F150	0,75÷1,5	0,30	CuZn-Sn	1108070	100

PITCH 5

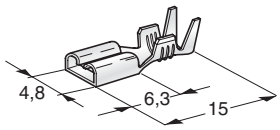

1

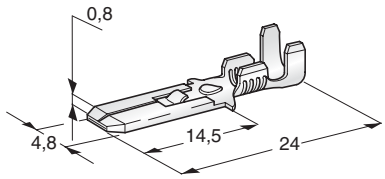

2

IMG	DESCRIPTION	WIRE SECTION mm²	MATERIAL THICKNESS mm	MATERIAL	P/N BOX	M.O.Q.	P/N REEL	M.O.Q.
1	PITCH 5 F480	0,5÷1,5	0,35	CuZn-Sn	1101940	100	1701940	12000
2	PITCH 5 M480 WITH LOCKING NOTCH	0,5÷1,5	0,40	CuZn-Sn	1101950	100		

PIN

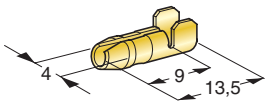

1

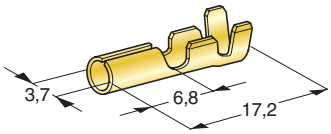

2

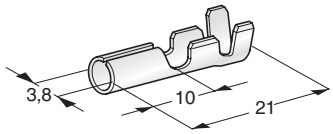

3

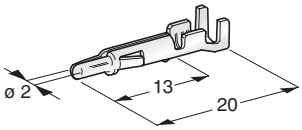

4

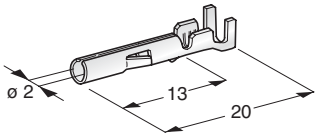

5

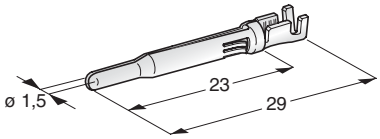

6

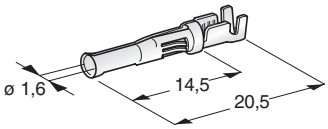

7

IMG	DESCRIPTION	WIRE SECTION mm²	MATERIAL THICKNESS mm	MATERIAL	P/N BOX	M.O.Q.
1	PIN TERMINAL L13 M4	1÷2,5	0,40	CuZn	1201000	100
2	PIN TERMINAL L17 F4	1÷2,5	0,40	CuZn	1201070	100
3	PIN TERMINAL L21 F4	0,5÷2,5	0,40	CuZn	1201110	100
4	MATE-N-LOCK M2	0,5÷2,5	0,30	CuZn-Sn	1201210	200
5	MATE-N-LOCK F2	0,5÷2,5	0,30	CuZn-Sn	1201200	200
6	ECONOSEAL M15	0,5÷1,5	0,30	CuZn-Sn	1201230	200
7	ECONOSEAL F15	0,5÷1,5	0,30	CuZn-Sn	1201220	200

PIN

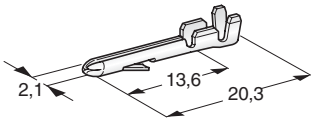

1

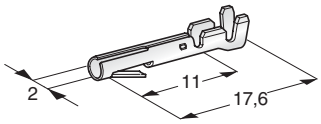

2

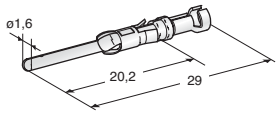

3

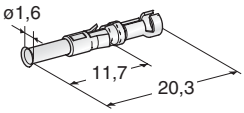

4

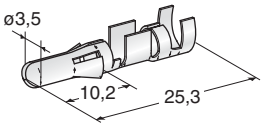

5

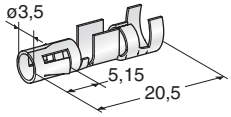

6

IMG	DESCRIPTION	WIRE SECTION mm²	MATERIAL THICKNESS mm	MATERIAL	P/N BOX	M.O.Q.
1	PIN TERMINAL L20 M2.1 FOR WATER TEMPERATURE	0,5÷1	0,32	CuZn-Sn	1201150	200
2	PIN TERMINAL L17 F2	0,5÷1	0,32	CuZn-Sn	1201160	200
3	PIN TERMINAL L29 M1.6	0,5÷1	0,35	CuSn-Sn	1107960	100
4	PIN TERMINAL L20 F1.6	0,5÷1	0,35	CuSn-Sn	1107970	100
5	PIN TERMINAL L25 M3.5	4÷6	0,35	CuSn-Sn	1107980	50
6	PIN TERMINAL L20 F3.5	2,5÷6	0,35	CuSn-Sn	1108000	50

IGNITION CABLES

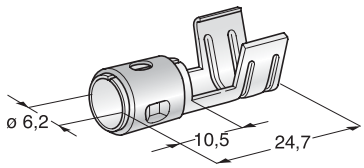

1

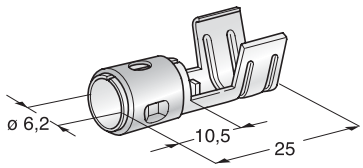

2

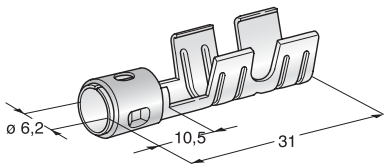

3

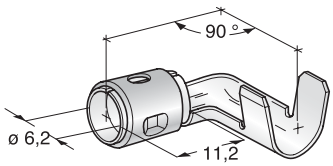

4

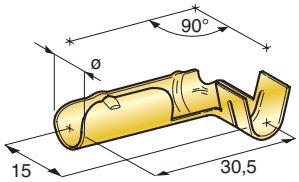

5

IMG	DESCRIPTION	WIRE SECTION mm²	ø mm	MATERIAL	MATERIAL THICKNESS mm	P/N REEL	M.O.Q.	P/N REEL	M.O.Q.
1	PLUG TERMINAL WITH CLIP	7	6,2	St AISI 430	0,5			1400860	2000
2	PLUG TERMINAL WITH CLIP	7	6,2	St AISI 430	0,5			1400865	2000
3	PLUG TERMINAL WITH CLIP	7	6,2	St AISI 430	0,5			1400850	2000
4	PLUG TERMINAL 90° WITH CLIP	7	6,2	St AISI 430	0,5			1400862	1000
5	COIL - DISTRIBUTOR TERMINAL 90°	7	8,3	CuZn 67	0,5	1200880	100	1400880	1250

INSULATED TERMINALS

RING

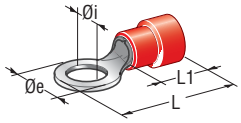

1

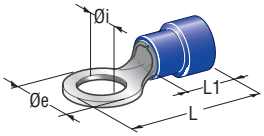

2

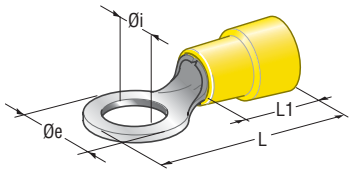

3

IMG	DESCRIPTION	WIRE SECTION mm2	Ø i mm	Ø e mm	L mm	L1 mm	MATERIAL	MATERIAL THIKNESS mm	P/N BOX	M.O.Q.	P/N BULK	M.O.Q.
1	RING	0,25-1÷1	3,2	5,5	18,0	10,5	Cu-Sn PA66	0,75	1853050	100	1853059	1000
		0,25-1÷1	3,7	5,5	18,0	10,5	Cu-Sn PA66	0,75	1853060	100	1853069	1000
		0,25-1÷1	4,3	6,6	20,1	10,5	Cu-Sn PA66	0,75	1853070	100	1853079	1000
		0,25-1÷1	5,3	8,0	21,5	10,5	Cu-Sn PA66	0,75	1853150	100	1853159	1000
		0,25-1÷1	6,4	11,6	27,4	10,5	Cu-Sn PA66	0,75	1853200	100	1853209	1000
		0,25-1÷1	8,4	11,6	27,4	10,5	Cu-Sn PA66	0,75	1853250	100		
2	RING	1÷2,5	4,3	8,5	23,0	11,0	Cu-Sn PA66	0,80	1857100	100	1857109	1000
		1÷2,5	5,3	8,5	23,0	11,0	Cu-Sn PA66	0,80	1857150	100	1857159	1000
		1÷2,5	6,4	12,0	28,0	11,0	Cu-Sn PA66	0,80	1857200	100	1857209	1000
		1÷2,5	8,4	12,0	28,0	11,0	Cu-Sn PA66	0,80	1857250	100	1857259	1000
3	RING	2,5÷6	4,3	7,2	23,5	14,0	Cu-Sn PA66	1	1863100	50	1863109	1000
		2,5÷6	5,3	9,5	27,0	14,0	Cu-Sn PA66	1	1863150	50	1863159	1000
		2,5÷6	6,4	12,0	30,5	14,0	Cu-Sn PA66	1	1863200	50	1863209	500
		2,5÷6	8,4	15,0	35,2	14,0	Cu-Sn PA66	1	1863250	50	1863259	500
		2,5÷6	10,4	15,0	35,2	14,0	Cu-Sn PA66	1	1863300	50	1863309	500

FORK

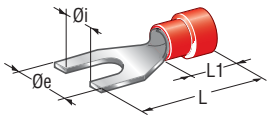

1

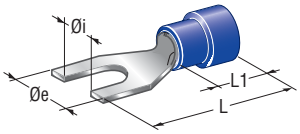

2

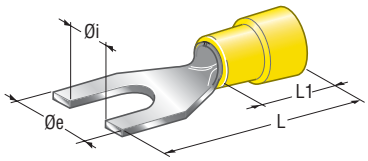

3

IMG	DESCRIPTION	WIRE SECTION mm2	Ø i mm	Ø e mm	L mm	L1 mm	MATERIAL	MATERIAL THIKNESS mm	P/N BOX	M.O.Q.	P/N BULK	M.O.Q.
1	FORK	0,25÷1	3,7	6,4	21,5	10,5	Cu-Sn PA66	0,75			1865069	1000
		0,25÷1	4,3	6,4	21,5	10,5	Cu-Sn PA66	0,75	1865100	100	1865109	1000
		0,25÷1	5,3	9,5	22,2	10,5	Cu-Sn PA66	0,75	1865200	100	1865209	1000
2	FORK	1÷2,5	4,3	6,4	22,7	11	Cu-Sn PA66	0,80	1866100	100	1866109	1000
		1÷2,5	6,4	12,0	28,4	11	Cu-Sn PA66	0,80	1866300	100	1866309	1000
3	FORK	2,5÷6	4,3	8,3	27,0	14	Cu-Sn PA66	1	1867000	50	1867009	1000
		2,5÷6	5,3	9,5	26,7	14	Cu-Sn PA66	1	1867100	50	1867109	1000
		2,5÷6	6,4	12,0	32,7	14	Cu-Sn PA66	1	1867200	50	1867209	1000

PUSH ON

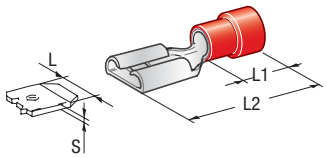

1

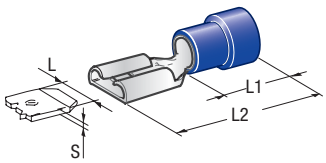

2

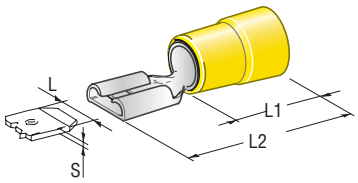

3

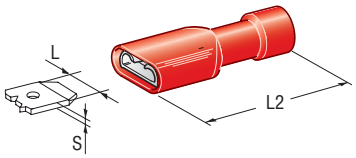

4

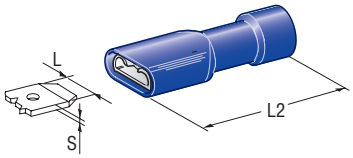

5

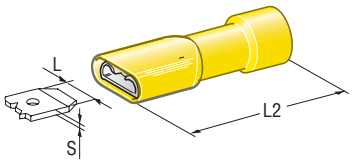

6

IMG.	DESCRIPTION	WIRE SECTION mm2	S mm	L mm	L1 mm	L2 mm	MATERIAL	MATERIAL THIKNESS mm	P/N BOX	M.O.Q.	P/N BULK	M.O.Q.
1	PUSH ON	0,25÷1	0,5	2,8	10,0	18,5	CuZn-Sn PVC	0,30	1850200	100	1850209	1000
		0,25÷1	0,8	2,8	10,0	18,5	CuZn-Sn PVC	0,30	1850400	100	1850409	1000
		0,25÷1	0,5	4,7	10,0	19,0	CuZn-Sn PVC	0,40	1850500	100	1850509	1000
		0,25÷1	0,8	4,7	10,0	19	CuZn-Sn PVC	0,40	1850300	100	1850309	1000
		0,25÷1	0,8	6,3	12,0	21	CuZn-Sn PVC	0,40	1851000	100	1851009	1000
2	PUSH ON	1÷2,5	0,5	2,8	10,0	19	CuZn-Sn PVC	0,30	1854200	100		
		1÷2,5	0,8	2,8	10,0	19	CuZn-Sn PVC	0,30	1854400	100	1854409	1000
		1÷2,5	0,5	4,7	10,0	19	CuZn-Sn PVC	0,40	1854500	100		
		1÷2,5	0,8	6,3	12,0	21,0	CuZn-Sn PVC	0,40	1855000	100	1855009	1000
3	PUSH ON	2,5÷6	0,8	6,3	13,0	22,4	CuZn-Sn PVC	0,40	1861000	50	1861009	500
		2,5÷6	1,1	9,5	14,0	30,0	CuZn-Sn PVC	0,40	1863000	50	1863009	500
4	PUSH ON	0,25÷1	0,5	4,7	-	21,5	CuZn-Sn PVC	0,40	1851400	100	1851409	1000
		0,25÷1	0,8	6,3	-	23,5	CuZn-Sn PVC	0,40	1851500	100	1851509	1000
5	PUSH ON	1÷2,5	0,5	4,7	-	21,5	CuZn-Sn PVC	0,40	1855400	100		
		1÷2,5	0,8	6,3	-	23,5	CuZn-Sn PVC	0,40	1855500	100	1855509	1000
6	PUSH ON	2,5÷6	0,8	6,3	-	24,0	CuZn-Sn PVC	0,40	1860500	50	1860509	500

PUSH ON

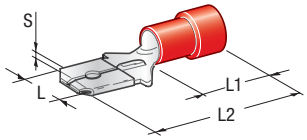

1

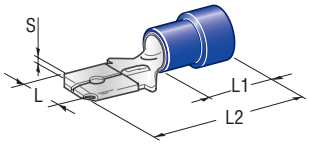

2

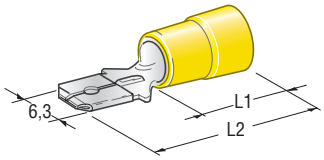

3

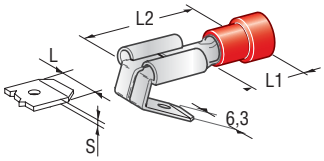

4

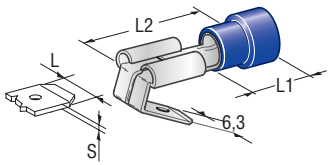

5

IMG.	DESCRIPTION	WIRE SECTION mm2	S mm	L mm	L1 mm	L2 mm	MATERIAL	MATERIAL THIKNESS mm	P/N BOX	M.O.Q.	P/N BULK	M.O.Q.
1	PUSH ON	0,25÷1	-	2,8	10	17,0	CuZn-Sn PVC	0,80	1850450	100	1850459	1000
		0,25÷1	-	6,3	12	21,0	CuZn-Sn PVC	0,80	1852000	100	1852009	1000
2	PUSH ON	1÷2,5	-	4,7	10	19,5	CuZn-Sn PVC	0,50	1854550	100	1854559	1000
		1÷2,5	-	6,3	12	21,0	CuZn-Sn PVC	0,80	1856000	100	1856009	1000
3	PUSH ON	2,5÷6	-	6,3	13	22,5	CuZn-Sn PVC	0,80	1862000	100	1862009	500
4	PIGGY BACK	0,25÷1	0,8	6,3	10	20,8	CuZn-Sn PVC	0,40	1852500	50	1852509	1000
5	PIGGY BACK	1÷2,5	0,8	6,3	10	20,8	CuZn-Sn PVC	0,40	1862500	50	1862509	1000

SELF STRIPPING

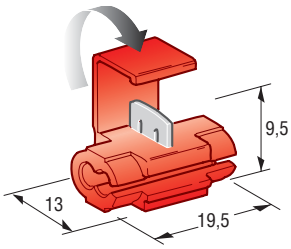

1

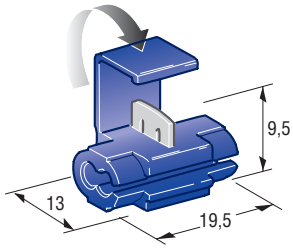

2

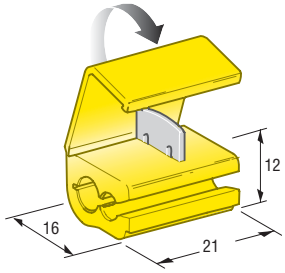

3

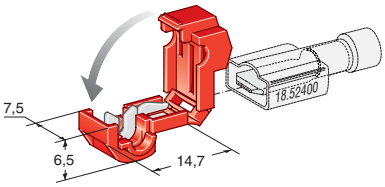

4

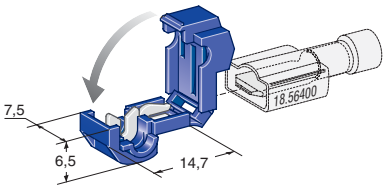

5

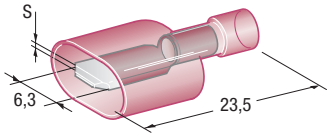

6

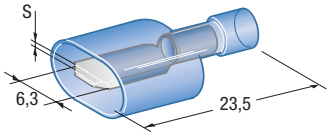

7

IMG	DESCRIPTION	WIRE SECTION mm2	MATERIAL	MATERIAL THIKNESS mm	P/N BOX	M.O.Q.	P/N BULK	M.O.Q.
1	SELF-STRIPPING	0,25÷1	CuZn-Sn PP	-	4410090	100	4510090	10000
2	SELF-STRIPPING	1÷2,5	CuZn-Sn PP	-	4410091	100	4510091	10000
3	SELF-STRIPPING	2,5÷6	CuZn-Sn PP	-	4410092	50	4510092	5000
4	T-CONNECTIONS	0,25÷1	CuZn-Sn PA66 V094	-	4410096	50	4510096	1000
5	T-CONNECTIONS	1÷2,5	CuZn-Sn PA66 V094	-	4410097	100		
6	M630	0,25÷1	CuZn-Sn PVC	0,80	1852400	50	1852409	1000
7	M630	1÷2,5	CuZn-Sn PVC	0,80	1856400	50	1856409	1000

BULLET

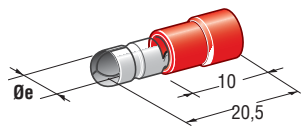

1

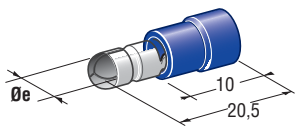

2

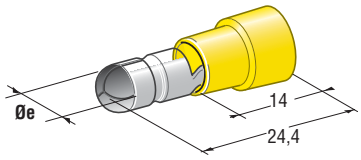

3

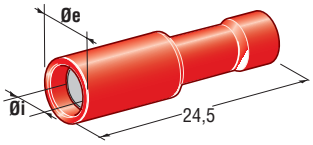

4

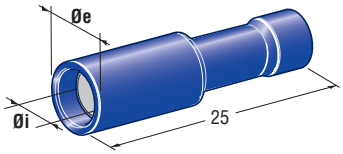

5

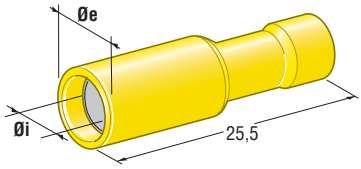

6

IMG	DESCRIPTION	WIRE SECTION mm2	Ø i mm	Ø e mm	MATERIAL	MATERIAL THIKNESS mm	P/N BOX	M.O.Q.	P/N BULK	M.O.Q.
1	MALE BULLET	0,25÷1	-	4,0	CuZn-Sn PVC	0,40	1864000	100	1864009	1000
2	MALE BULLET	1÷2,5	-	4,0	CuZn-Sn PVC	0,40	1864300	100	1864309	1000
		1÷2,5	-	5,0	CuZn-Sn PVC	0,40	1864500	100	1864509	1000
3	MALE BULLET	2,5÷6	-	5,0	CuZn-Sn PVC	0,40	1864700	100		
4	FEMALE BULLET	0,25÷1	3,86	6,3	CuZn-Sn PVC	0,40	1864100	100	1864109	1000
5	FEMALE BULLET	1÷2,5	3,86	6,3	CuZn-Sn PVC	0,40	1864400	100	1864409	1000
		1÷2,5	4,85	7,0	CuZn-Sn PVC	0,40	1864600	50	1864609	1000
6	FEMALE BULLET	2,5÷6	4,85	7,0	CuZn-Sn PVC	0,40	1864800	50		

PIN & BUTT

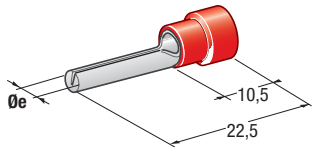

1

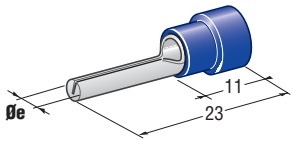

2

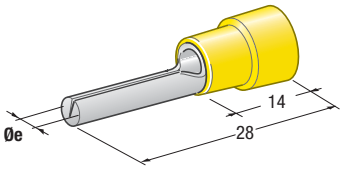

3

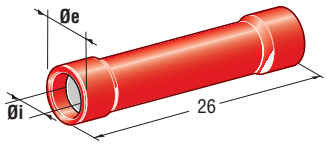

4

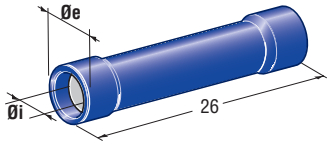

5

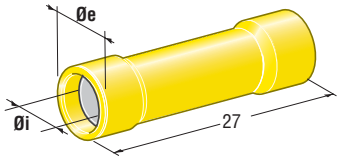

6

IMG	DESCRIPTION	WIRE SECTION mm2	Ø i mm	Ø e mm	MATERIAL	MATERIAL THIKNESS mm	P/N BOX	M.O.Q.	P/N BULK	M.O.Q.
1	PIN	0,25÷1	-	1,9	CuZn-Sn PA66	0,75	1869000	100	1869009	1000
2	PIN	1÷2,5	-	1,9	CuZn-Sn PA66	0,80	1869100	100	1869109	3000
3	PIN	2,5÷6	-	2,7	CuZn-Sn PA66	1	1869200	100		
4	BUTT	0,25÷1	1,70	4,0	CuZn-Sn PVC	0,40	1868000	100	1868009	1000
5	BUTT	1÷2,5	2,30	4,6	CuZn-Sn PVC	0,40	1868100	100	1868109	1000
6	BUTT	2,5÷6	3,40	6,4	CuZn-Sn PVC	0,40	1868200	50	1868209	500

HEAT SHRINK

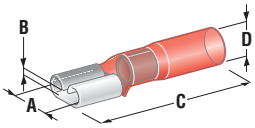

1

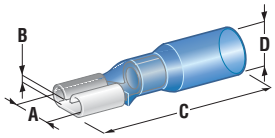

2

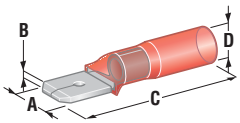

3

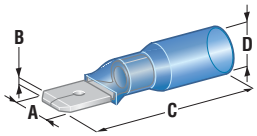

4

IMG	DESCRIPTION	WIRE SECTION mm2	A mm	B mm	C mm	D mm	MATERIAL	MATERIAL THIKNESS mm	P/N BOX	M.O.Q.
1	HEAT SHRINK WP F630	0,25÷1	6,35	0,8	27	4,2	CuZn-Sn PE	0,40	1880300	100
2	HEAT SHRINK WP F630	1,25÷2,5	6,35	0,8	28	4,9	CuZn-Sn PE	0,40	1880310	100
3	HEAT SHRINK WP M630	0,75÷1,25	6,35	0,8	27	4,2	CuZn-Sn PE	-	1880280	100
4	HEAT SHRINK WP M630	1,25÷2,5	6,35	0,8	28	4,9	CuZn-Sn PE	-	1880290	100

HEAT SHRINK

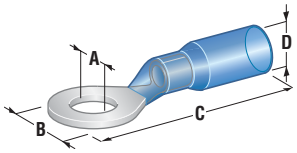

1

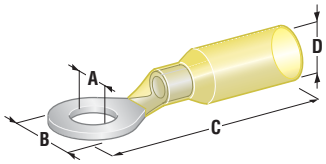

2

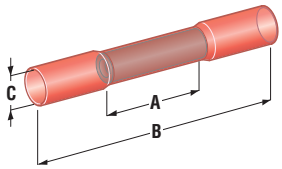

3

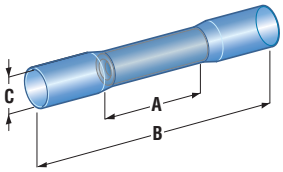

4

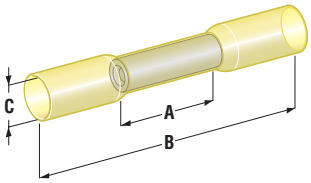

5

IMG	DESCRIPTION	WIRE SECTION mm2	A mm	B mm	C mm	D mm	MATERIAL	MATERIAL THIKNESS mm	P/N BOX	M.O.Q.
1	RING	1,25÷2,50	4,30	8,5	28	4,9	Cu-Sn PE	0,8	1880060	100
		1,25÷2,50	5,30	9,5	29	4,9	Cu-Sn PE	0,8	1880070	100
		1,25÷2,50	6,40	12,0	33	4,9	Cu-Sn PE	0,8	1880080	100
		1,25÷2,50	8,40	12,0	34	4,9	Cu-Sn PE	0,8	1880090	100
		1,25÷2,50	10,50	15,0	37	4,9	Cu-Sn PE	0,8	1880100	100
2	RING	2,5÷6	5,30	9,5	34	6,4	Cu-Sn PE	1,0	1880120	50
		2,5÷6	6,40	12,0	37	6,4	Cu-Sn PE	1,0	1880130	50
		2,5÷6	8,40	15,0	43	6,4	Cu-Sn PE	1,0	1880140	50
		2,5÷6	10,50	15,0	43	6,4	Cu-Sn PE	1,0	1880150	50
3	BUTT	0,75÷1,25	15,00	37,0	4,2	-	Cu-Sn PE	0,8	1880230	100
4	BUTT	1,25÷2,50	15,00	37,0	4,9	-	Cu-Sn PE	0,8	1880240	100
5	BUTT	2,5÷6	15,00	41,0	6,4	-	Cu-Sn PE	0,8	1880250	50

KITS

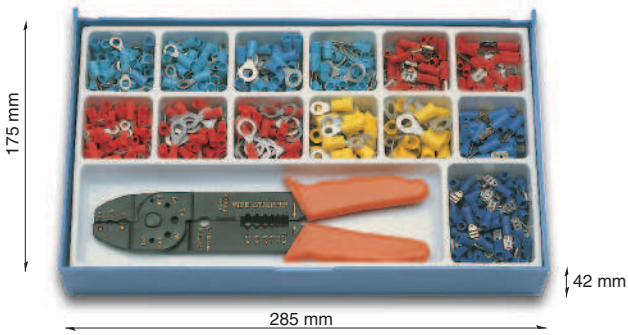

1

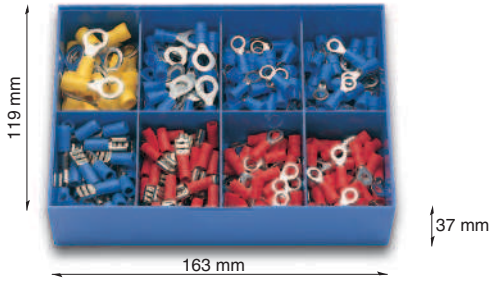

2

IMG	DESCRIPTION	PCS	COLOUR		P/N BOX	M.O.Q.
1	RING TERMINAL ø 4,3	50	Red		1860000	1
	RING TERMINAL ø 5,3	50	Red			
	RING TERMINAL ø 6,4	40	Red			
	RING TERMINAL ø 4,3	50	Blue			
	RING TERMINAL ø 5,3	40	Blue			
	RING TERMINAL ø 6,4	40	Blue			
	RING TERMINAL ø 8,4	30	Blue			
	RING TERMINAL ø 6,4	20	Yellow			
	RING TERMINAL ø 8,4	20	Yellow			
	MALE TERMINAL 6,3	40	Red			
	MALE TERMINAL 6,3	40	Blue			
	FEMALE TERMINAL 6,3	40	Red			
	FEMALE TERMINAL 6,3	70	Blue			
	CRIMPING TOOL 9602460	1				
2	RING TERMINAL ø 4,3	40	Red		1606855	1
	RING TERMINAL ø 5,3	40	Red			
	RING TERMINAL ø 4,3	40	Blue			
	RING TERMINAL ø 5,3	40	Blue			
	RING TERMINAL ø 6,4	40	Blue			
	RING TERMINAL ø 8,4	25	Yellow			
	FEMALE TERMINAL 6,3	40	Red			
	FEMALE TERMINAL 6,3	40	Blue			

CRIMPING TOOLS

TUBOLAR TERMINALS

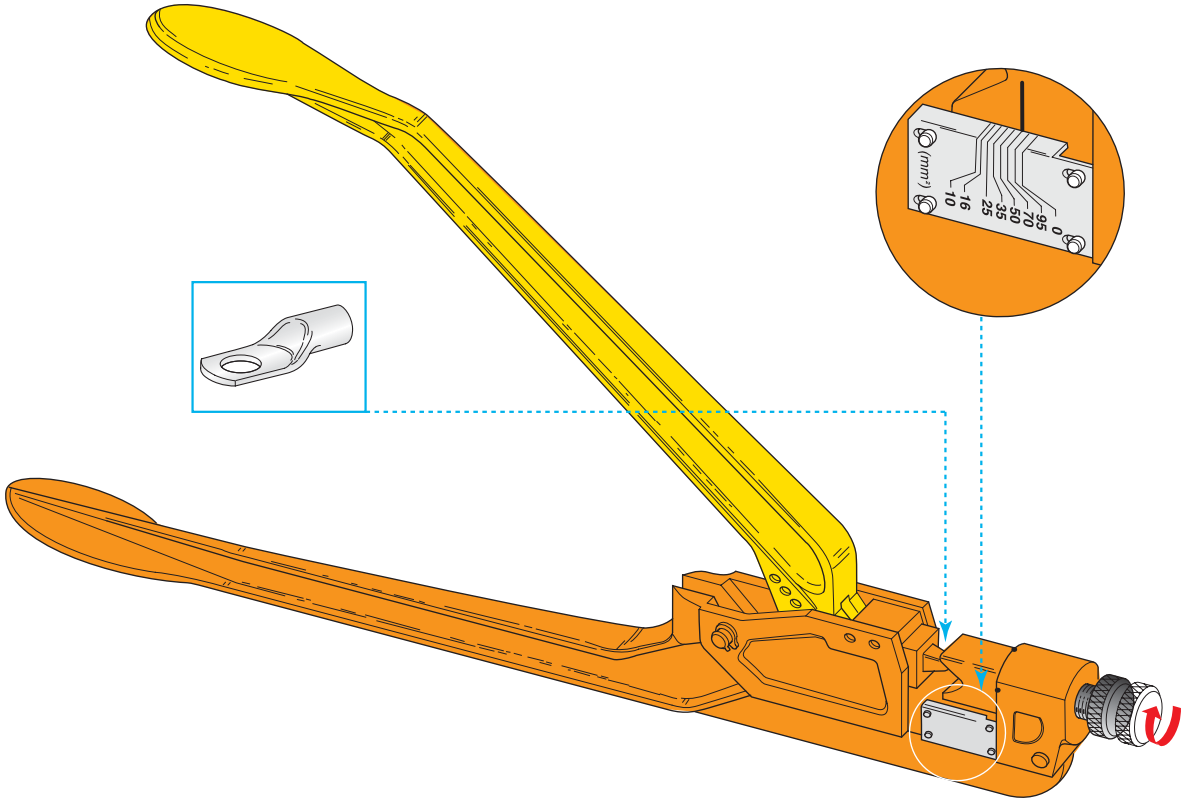

1

IMG	DESCRIPTION	WIRE SECTION mm2	LENGHTH mm	WEIGHT g	P/N BOX	M.O.Q.
1	TOOL FOR TUBOLAR TERMINALS	10÷95	565÷585	2916	9602490	1

TERMINALS

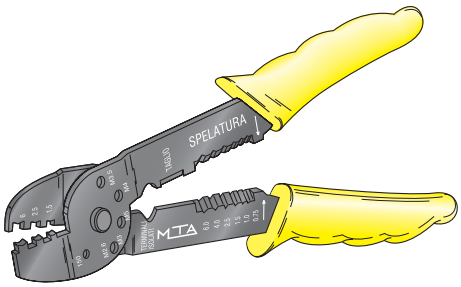

1

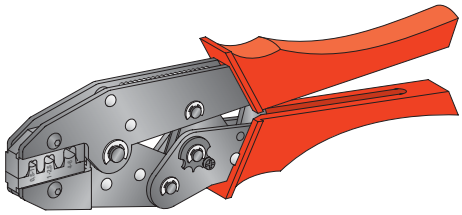

2

IMG	DESCRIPTION	WIRE SECTION mm2	P/N BOX	M.O.Q.
1	CRIMPING TOOL	1,5÷6	9602450	1
2	CRIMPING TOOL - PROFESSIONAL TYPE	0,5÷6	9602455	1

INSULATED TERMINALS

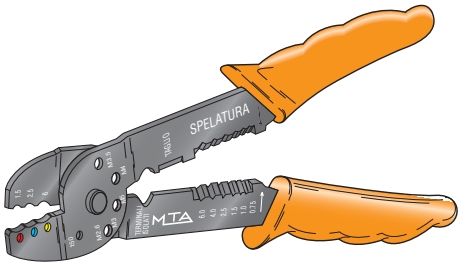

1

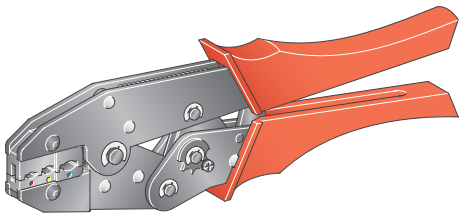

2

IMG	DESCRIPTION	WIRE SECTION mm2	P/N BOX	M.O.Q.
1	CRIMPING TOOL	0,25÷6	9602460	1
2	CRIMPING TOOL - PROFESSIONAL TYPE	0,25÷6	9602500	1

CAPS

SPARK PLUGS

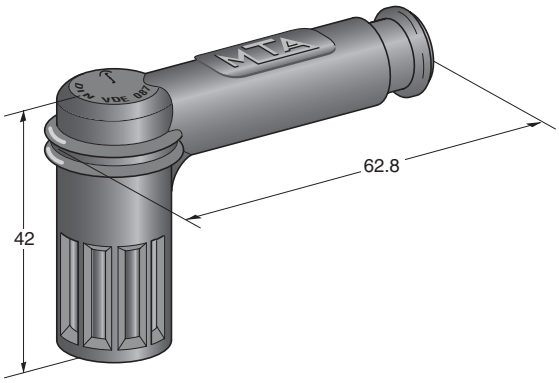

1

IMG	DESCRIPTION	SPARK PLUG	RESISTANCE Ω	MATERIAL	COLOUR	P/N BOX	M.O.Q.	P/N BULK	M.O.Q.
1	SPARK PLUG	A	5000	EPDM	Black	1000900	5	1900900	500
	SPARK PLUG	B	5000	EPDM	Blue	1000910	5	1900910	500
	SPARK PLUG	C	5000	EPDM	Black			1900920	500
	SPARK PLUG	D	5000	EPDM	Black	1000930	5	1900930	500
	SPARK PLUG	D	5000	EPDM	Red			1900940	500

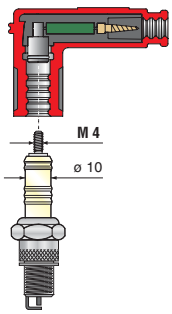

A

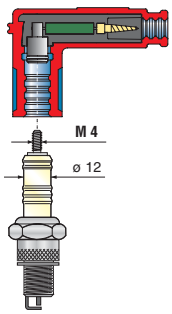

B

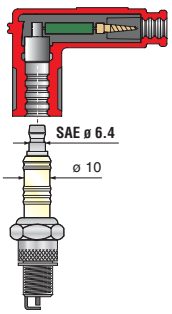

C

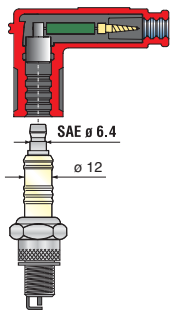

D

SPARK PLUGS

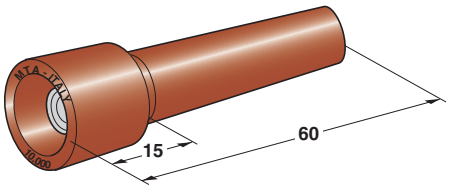

1

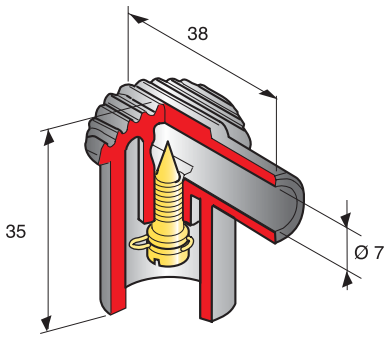

2

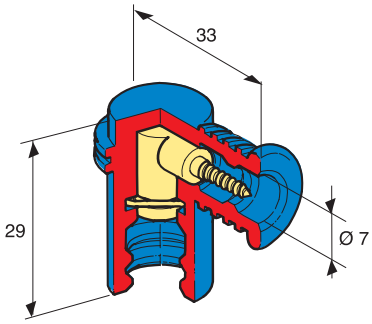

3

IMG	DESCRIPTION	MATERIAL	RESISTANCE Ω	CABLE mm	P/N BOX	M.O.Q.
1	SUPPRESSOR WITH WIRE WOUND RESISTOR	PBT GF20	5000	-	1000618	50
2	SPARK PLUG WITH CARBON RESISTOR	PVC CuZn	-	7	1200580	50
3	SPARK PLUG WITH CARBON RESISTOR	EPDM CuZn	-	7	1200590	50
	SPARK PLUG WITH WIRE WOUND RESISTOR	EPDM CuZn	-	7	1900590	1000

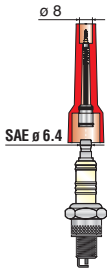

1000618

CAPS

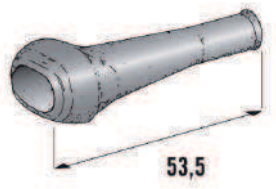

1

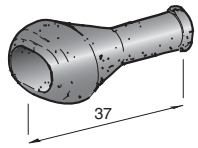

2

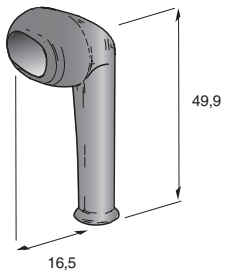

3

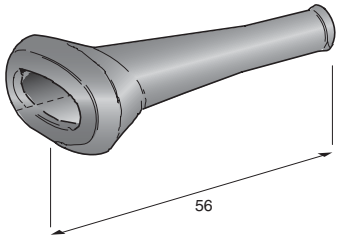

4

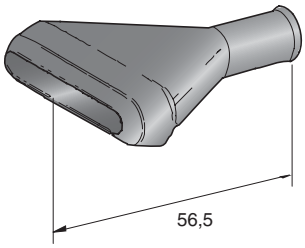

5

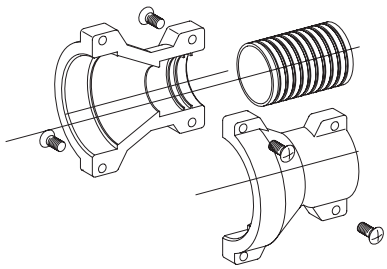

6

IMG	DESCRIPTION	WAY	ø mm	MATERIAL	COLOUR	P/N BOX	M.O.Q.	P/N BULK	M.O.Q.
1	CAP FOR CONNECTOR JT	2		Rubber	■ Black	4420901	10	4520901	500
2	CAP FOR CONNECTOR JT	2		Rubber	■ Black	4420902	10	4520902	500
3	CAP FOR CONNECTOR JPT	2		Rubber	■ Black	4420911	10	4520911	500
4	CAP FOR CONNECTOR JPT	3		Rubber	■ Black	4420921	10	4520921	500
5	CAP FOR CONNECTOR JT	7		Rubber	■ Black	4420931	5	4520931	500
6	ADAPTOR FOR CONNECTORS		44,6	PA66	■ Black			4551575	500

CAPS

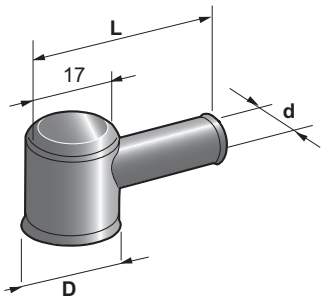

1

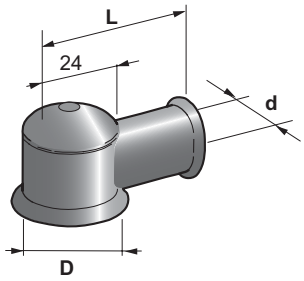

2

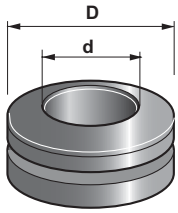

3

IMG	DESCRIPTION	L	d	D	MATERIAL	COLOUR	P/N BOX	M.O.Q.	P/N BULK	M.O.Q.
1	CAP	37	6	11	PVC	■ Black			4410300	100
	CAP	41	7,5	15	PVC	■ Black			4410310	100
	CAP	61	9	16	PVC	■ Black			4410320	100
2	ALTERNATOR CAP	48	11	21	CR60	■ Black	4410400	10	4510400	500
3	FAIRLEAD		9	16,5	PVC	■ Black			4410360	250

RADIATOR/OIL/GASOLINE CAPS

RADIATOR

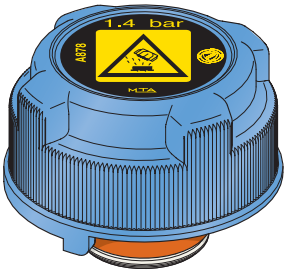

1

2

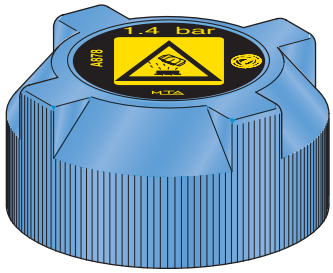

3

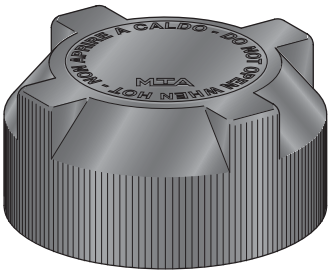

4

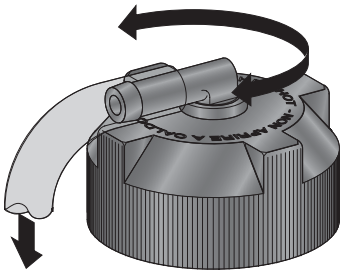

5

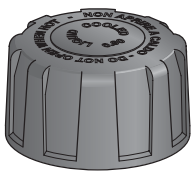

6

IMG	DESCRIPTION	PRESSION BAR	DEPRESSION BAR	MATERIAL	COLOUR	P/N BOX	M.O.Q.	P/N BULK	M.O.Q.
1	RADIATOR CAP	1	0,04 - 0,10	PP GF30	Blue			5056005	500
	RADIATOR CAP	1,4	0,04 - 0,10	PP GF30	Blue	5014877	1	5056000	500
2	RADIATOR CAP	1,4	0,04 - 0,10	PP GF30	Green			5056008	300
3	RADIATOR CAP	1	0,04 - 0,10	PP GF30	Black	5014862	1	5050123	200
	RADIATOR CAP	1,4	0,04 - 0,10	PP GF30	Blue	5014873	1	5050103	200
4	RADIATOR CAP	1	0,04 - 0,10	PP GF30	Black	5014861	1	5114861	200
	RADIATOR CAP	1,2	0,04 - 0,10	PP GF30	Black			5050124	200
5	RADIATOR CAP	0,5	0,04 - 0,10	PP GF30	Black	5014900	1	5050090	200
	RADIATOR CAP	1	0,04 - 0,10	PP GF30	Black	5014901	1	5114901	200
	RADIATOR CAP	1,4	0,04 - 0,10	PP GF30	Blue			5050108	200
6	RADIATOR CAP	0,9	0,04 - 0,10	PP GF30	Black			5050097	270
	RADIATOR CAP	1,1	0,04 - 0,10	PP GF30	Black			5050121	270

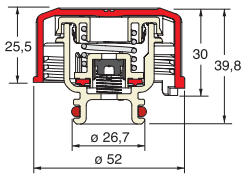

1+2

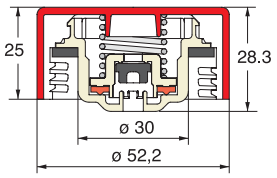

3+4

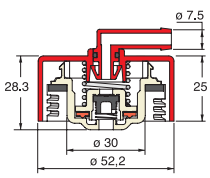

5

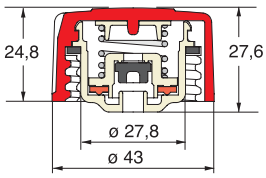

6

RADIATOR

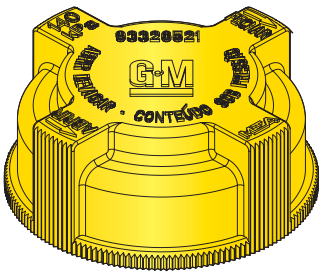

1

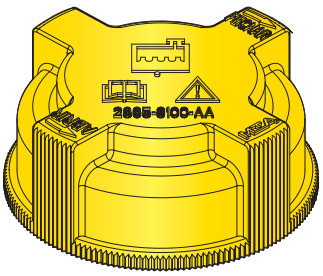

2

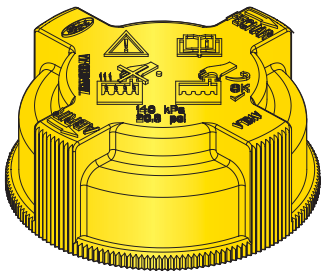

3

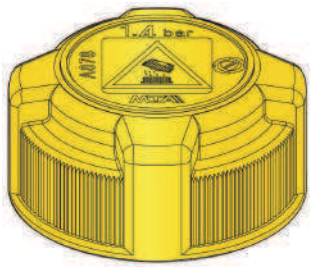

4

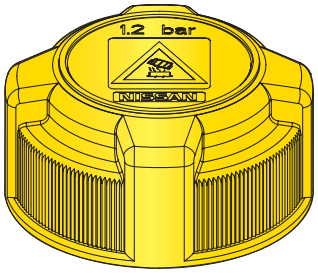

5

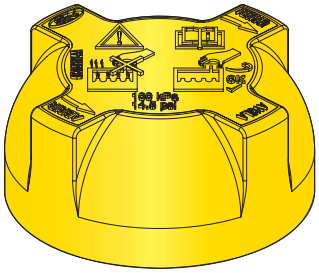

6

IMG	DESCRIPTION	PRESSION BAR	DEPRESSION BAR	MATERIAL	COLOUR	P/N	M.O.Q.
1	RADIATOR CAP GM	1,4	0,15 Max	PP GF30	Yellow	5050140	500
2	RADIATOR CAP (FORD)	1,4	0,04 - 0,10	PP GF30	Yellow	5050143	500
	RADIATOR CAP (FORD)	1,4	0,04 - 0,10	PP GF30	Black	5050156	200
3	RADIATOR CAP FORD	1,4	0,04 - 0,10	PP GF30	Yellow	5050147	500
	RADIATOR CAP FORD	1,4	0,04 - 0,10	PP GF30	Black	5050155	200
4	RADIATOR CAP FIAT	1,0	0,04 - 0,10	PP GF30	Yellow	5050126	500
	RADIATOR CAP FIAT	1,4	0,04 - 0,10	PP GF30	Yellow	5050127	500
5	RADIATOR CAP NISSAN	1,2	0,04 - 0,10	PP GF30	Yellow	5050227	500
6	RADIATOR CAP FORD TRUCK	1,0	0,15 Max	PP GF30	Yellow	5050136	500

GASOLINE

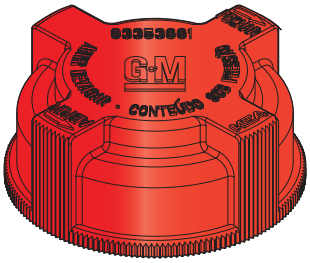

1

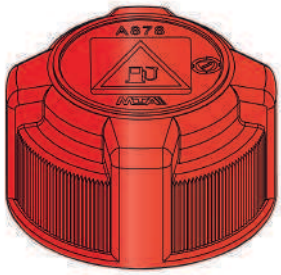

2

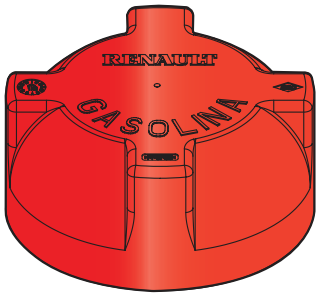

3

IMG	DESCRIPTION	PRESSION BAR	DEPRESSION BAR	MATERIAL	COLOUR	P/N	M.O.Q.
1	GASOLINE CAP GM	0,35	0,08 Max	PP GF30	Red	5050128	500
2	GASOLINE CAP FIAT	0,6	0,04 - 0,10	PP GF30	Red	5051108	500
3	GASOLINE CAP RENAULT	0,6	0,04 - 0,10	PP GF30	Red	5151137	500

OIL

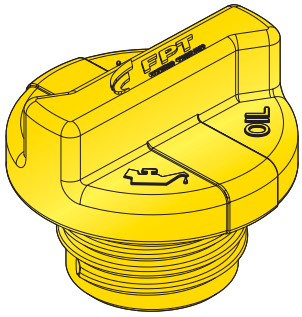

1

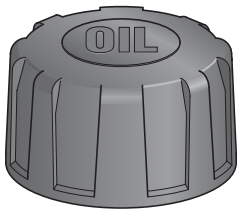

2

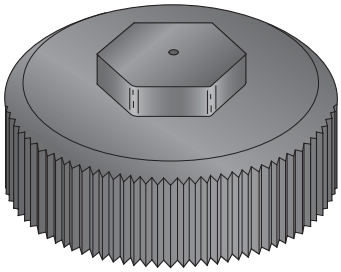

3

IMG	DESCRIPTION	MATERIAL	COLOUR	P/N	M.O.Q.
1	OIL CAP FIAT/FORD	PP GF30	Yellow	5050133	500
2	VENTED OIL CAP PIAGGIO	PP GF30		5050106	270
3	DIESEL OIL TANK FOR TRUCKS	PP	Black	5515870	5

SENSORS

LEVEL SENSORS

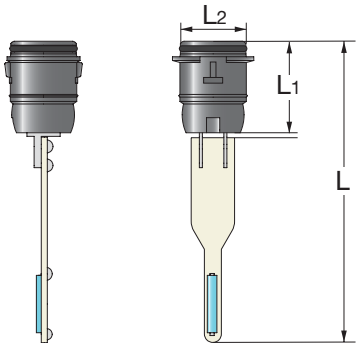

1

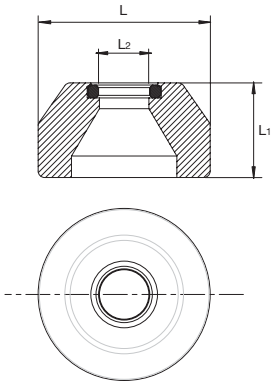

2

IMG	DESCRIPTION	TYPE	L mm	L1 mm	L2 mm	MATERIAL	P/N	M.O.Q.
1	LEVEL SENSOR	A	58,15	24,25	17,35	PA66	7050090	600
	LEVEL SENSOR	B	79,65	24,25	17,35	PA66	7050091	400
2	FLOAT	A-B	40	22	11,5	PP	7057091	1000

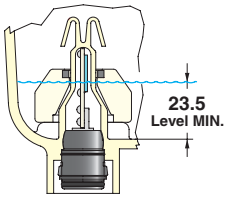

A

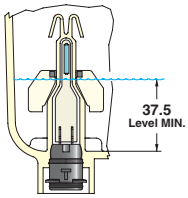

B

LEVEL SENSORS

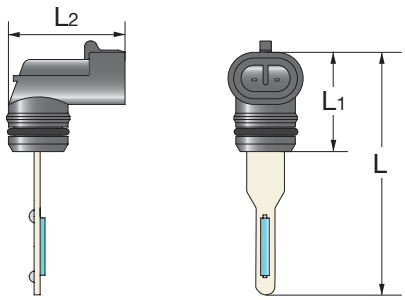

1

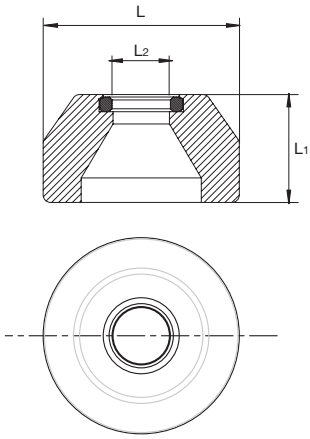

2

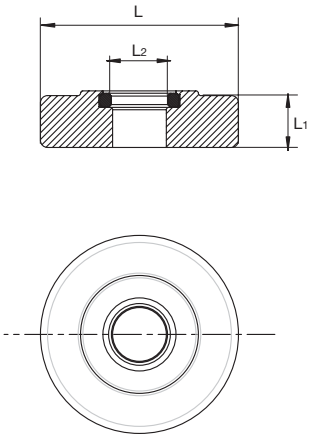

3

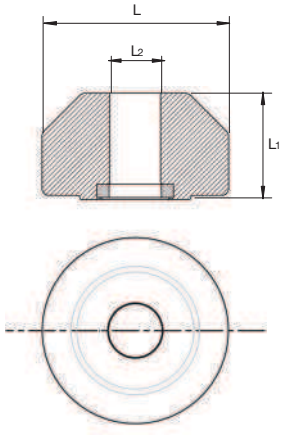

4

IMG	DESCRIPTION	TYPE	L mm	L1 mm	L2 mm	MATERIAL	P/N	M.O.Q.
1	LEVEL SENSOR	A	64,4	26,4	30,9	PA66	7050088	600
	LEVEL SENSOR	B	84,4	26,4	30,9	PA66	7050096	400
	LEVEL SENSOR	C	53,7	26,4	30,9	PA66	7050092	600
	LEVEL SENSOR	A	64,4	26,4	30,9	PA66	7050100	600
	LEVEL SENSOR	A	64,4	26,4	30,9	PA66	7050101	600
2	FLOAT		40	22	11,5	PP White	7057091	1000
3	FLOAT	A	42	11	11,4	PA Light Blue	7057093	1000
	FLOAT	C	42	11	11,4	PP White	7057092	700
4	FLOAT	A-B	42	24	11,4	PP White	7057088	1000

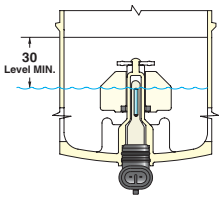

A

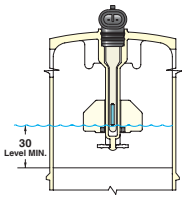

B

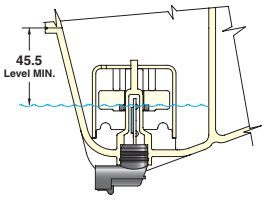

C

LEVEL SENSORS

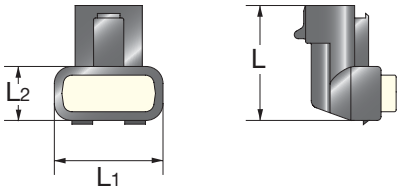

1

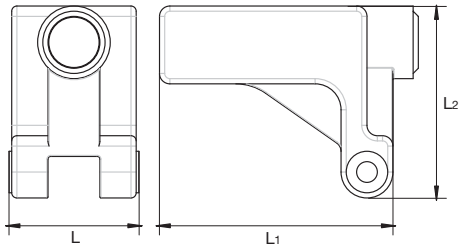

2

IMG	DESCRIPTION	TYPE	L mm	L1 mm	L2 mm	MATERIAL	P/N	M.O.Q.
1	LEVEL SENSOR	A	30,45	28,8	14,3	PA66	7050081	620
2	FLOAT	A	25	45	25	PP	7057081	1000

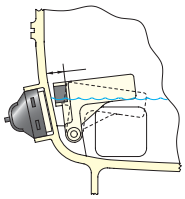

A

CABLES

SPIRAL CABLE WITH CONNECTORS

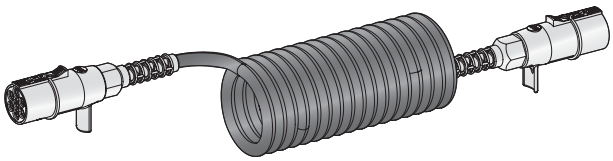

1

2

3

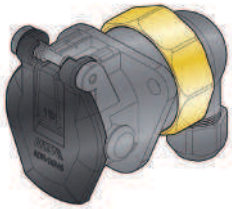

4

IMG	DESCRIPTION	PIN N.	SPIRAL COLOUR	MAX LENGTH mm	P/N BOX	M.O.Q.
1	SPIRAL CABLE VOLKSWAGEN	7	Black	4200	9815530	10
2	SPIRAL CABLE FORD	15-7	Red	5500	9815550	10
	SPIRAL CABLE VOLKSWAGEN	15-7	Black	5500	9815561	TBD
	SPIRAL CABLE VOLVO	15-7	Black	5500	9815560	TBD
3	SPIRAL CABLE	7	Black	4500	9815562	TBD
4	SOCKET FOR SPIRAL CABLE	15	-	-	2550087	50

CHARGING CLIPS

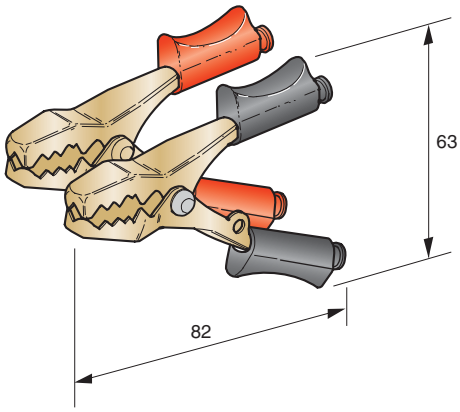

1

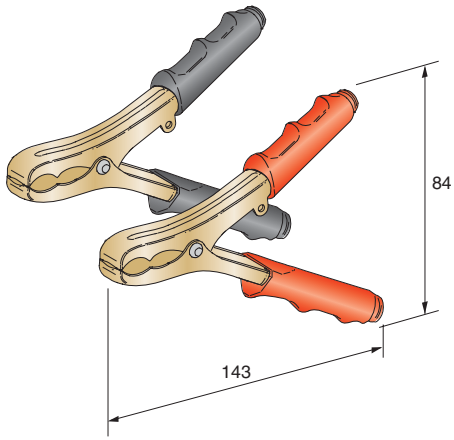

2

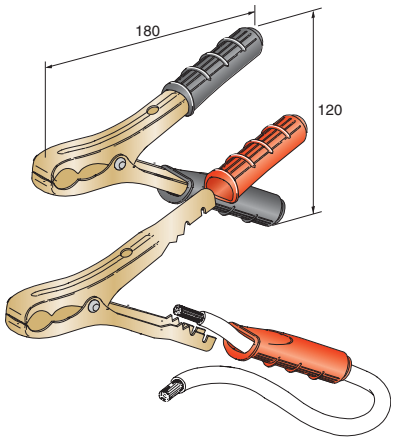

3

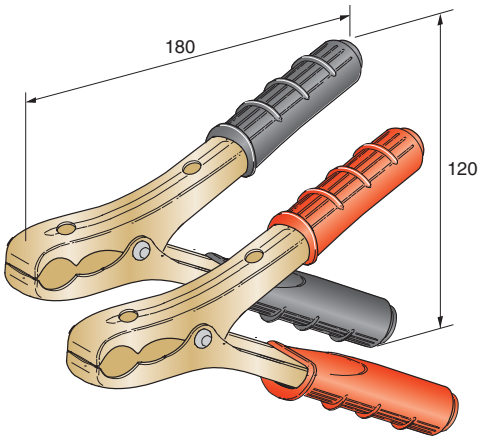

4

IMG	DESCRIPTION	AMP	COLOUR	WIRE SECTION mm2	P/N BOX	M.O.Q.	P/N BULK	M.O.Q.
1	CHARGING CLIP	40 A	Red+Black	6÷10	4814220	20		
	CHARGING CLIP	40 A	Red	6÷10	4814221	20	4914221	300
	CHARGING CLIP	40 A	Black	6÷10	4814222	20	4914222	300
2	CHARGING CLIP	100 A	Red+Black	10÷25	4814252	4		
	CHARGING CLIP	100 A	Red	10÷25	4814256	4	4914256	200
	CHARGING CLIP	100 A	Black	10÷25	4814257	4	4914257	200
3	CHARGING CLIP	120 A	Red+Black	10÷35	4814251	4		
	CHARGING CLIP	120 A	Red	10÷35	4814258	4	4914258	100
	CHARGING CLIP	120 A	Black	10÷35	4814259	4	4914259	100
4	CHARGING CLIP	200 A	Red+Black	10÷35	4814255	4		
	CHARGING CLIP	200 A	Red	10÷35	4814262	4	4914262	100
	CHARGING CLIP	200 A	Black	10÷35	4814264	4	4914264	100

CHARGING CLIPS

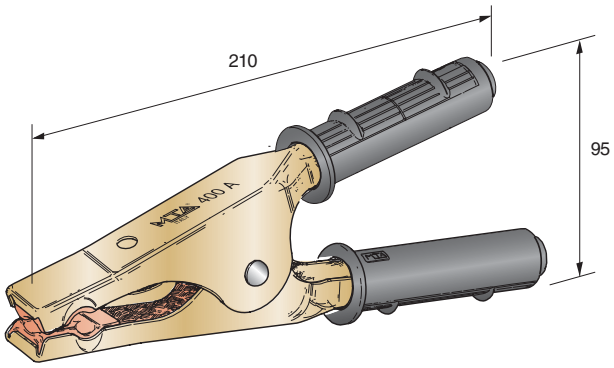

1

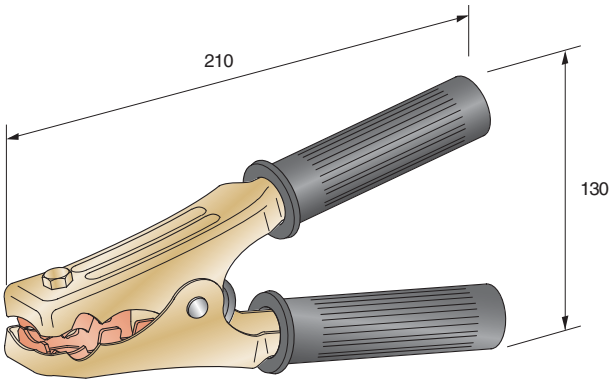

2

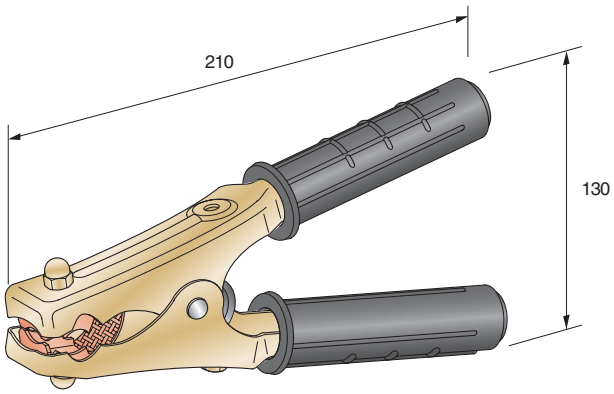

3

IMG	DESCRIPTION	AMP	COLOUR	WIRE SECTION mm2	P/N BOX	M.O.Q.	P/N BULK	M.O.Q.
1	CHARGING CLIPS	400 A	Red+Black	10÷30	4814250	4		
	CHARGING CLIPS	400 A	Red	10÷30	4814267	4	4914267	50
	CHARGING CLIPS	400 A	Black	10÷30	4814268	4	4914268	50
2	CHARGING CLIPS	500 A	Red+Black	35÷50	4814311	4		
	CHARGING CLIPS	500 A	Red	35÷50	4914312	25		
	CHARGING CLIPS	500 A	Black	35÷50	4914313	25		
3	CHARGING CLIPS	600 A	Red+Black	50	4814321	4		
	CHARGING CLIPS	600 A	Red	50	4914322	25		
	CHARGING CLIPS	600 A	Black	50	4914323	25		

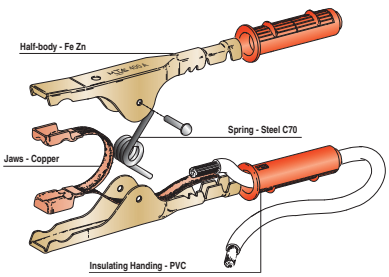

1

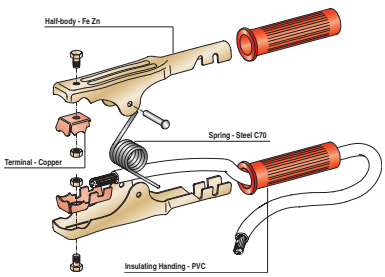

2

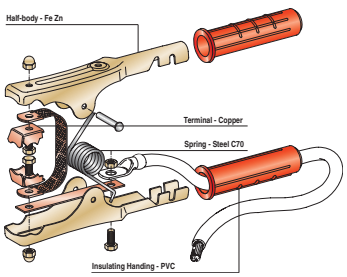

3

CHARGING CLIPS

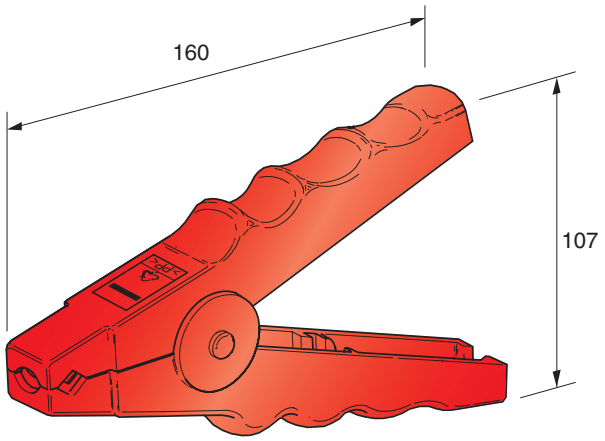

1

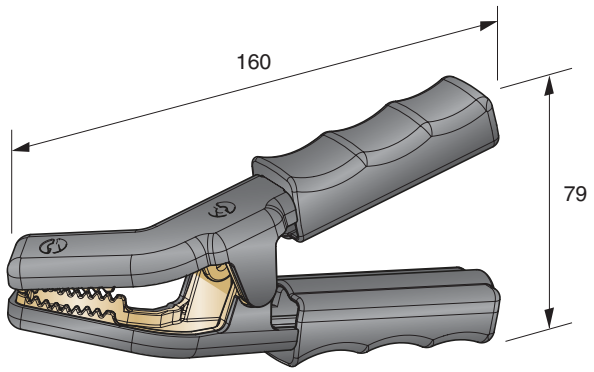

2

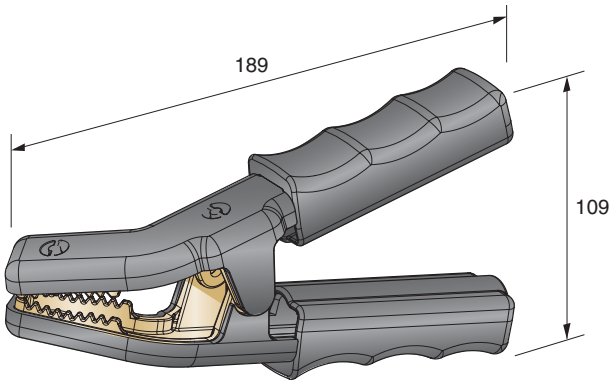

3

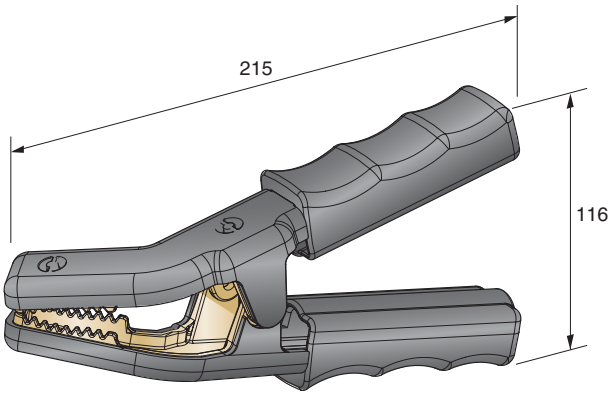

4

IMG	DESCRIPTION	AMP	COLOUR	WIRE SECTION mm2	P/N BOX	M.O.Q.	P/N BULK	M.O.Q.
1	CHARGING CLIPS	300 A	Red+Black	10÷25	4814254	4		
	CHARGING CLIPS	300 A	Red	10÷25			4914265	150
	CHARGING CLIPS	300 A	Black	10÷25			4914266	150
2	CHARGING CLIPS	650 A	Red+Black	10÷35	4814330	4		
3	CHARGING CLIPS	850 A	Red+Black	25÷70	4814331	4		
	CHARGING CLIPS	850 A	Red	25÷70	4914327	17		
	CHARGING CLIPS	850 A	Black	25÷70	4914326	17		
4	CHARGING CLIPS	1000 A	Red+Black	35÷70	4814332	4		

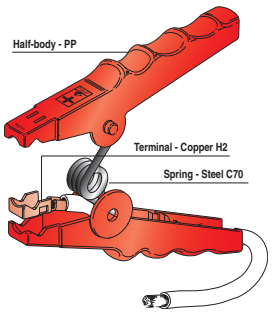

1

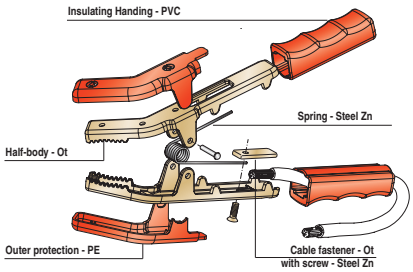

2+3+4

BOOSTER CABLES

1

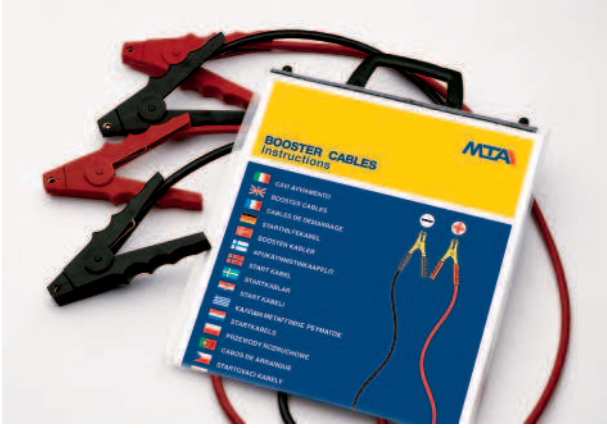

2

3

4

IMG	DESCRIPTION	MATERIAL	AMP	L mm	WIRE SECTION mm2		P/N BOX	M.O.Q.
1	BOOSTER CABLES	HI-FLEX	120 A	2500	10		4814261	1
		HI-FLEX	120 A	2500	16		4814271	1
		HI-FLEX	120 A	3500	16		4814272	1
		HI-FLEX	120 A	2500	25		4814281	1
		HI-FLEX	120 A	3500	25		4814282	1
2	BOOSTER CABLES	HI-FLEX	300 A	3000	16		4814341	1
		HI-FLEX	300 A	2500	25		4814350	1
		HI-FLEX	300 A	3500	25		4814351	1
3	BOOSTER CABLES	HI-FLEX	400 A	3500	25		4814290	1
		HI-FLEX	400 A	5000	25		4814291	1
4	BOOSTER CABLES	HI-FLEX	500 A	5000	35		4814295	1
		HI-FLEX	500 A	3500	50		4814373	1
		HI-FLEX	500 A	5000	50		4814375	1
	BOOSTER CABLES	HI-FLEX	600 A	5000	50		4814361	1

REUSABLE BAG WITH HANDLES

19 LANGUAGES INSTRUCTIONS

CABLES FIXING

SELF EXTINGUISHING CABLE TIES

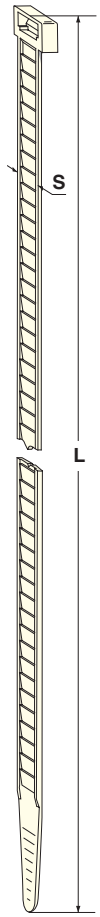

1

2

IMG.	DESCRIPTION	MATERIAL	OPERATION TEMP	L mm	S mm	ø mm	Kg mm	P/N WHITE	M.O.Q.	P/N BLACK	M.O.Q.
1/2	SELF EXTINGUISHING CABLE TIE	PA66 V2 - UL94	-40°c +85°c	75	2,2	15	7			4621400	100
		PA66 V2 - UL94	-40°c +85°c	98	2,5	20	8	4621110	100	4621410	100
		PA66 V2 - UL94	-40°c +85°c	135	2.5	25	8	4621120	100	4621420	100
		PA66 V2 - UL94	-40°c +85°c	200	2,6	50	8	4621130	100	4621430	100
		PA66 V2 - UL94	-40°c +85°c	140	3,6	30	13	4621140	100	4621440	100
		PA66 V2 - UL94	-40°c +85°c	290	3,6	75	13	4621150	100	4621450	100
		PA66 V2 - UL94	-40°c +85°c	160	4,5	36	18			4621460	100
		PA66 V2 - UL94	-40°c +85°c	178	4,8	40	22	4621170	100	4621470	100
		PA66 V2 - UL94	-40°c +85°c	200	4,8	50	22	4621180	100	4621480	100
		PA66 V2 - UL94	-40°c +85°c	250	4,8	62	22	4621190	100	4621490	100
		PA66 V2 - UL94	-40°c +85°c	290	4,8	75	22	4621200	100	4621500	100
		PA66 V2 - UL94	-40°c +85°c	360	4,8	100	22	4621210	100	4621510	100
		PA66 V2 - UL94	-40°c +85°c	120	7,8	20	54			4621520	100
		PA66 V2 - UL94	-40°c +85°c	180	7,8	40	54			4621530	100
		PA66 V2 - UL94	-40°c +85°c	240	7,8	50	54	4621240	100	4621540	100
		PA66 V2 - UL94	-40°c +85°c	300	7,8	77	54			4621550	100
		PA66 V2 - UL94	-40°c +85°c	365	7,8	100	54	4621260	100	4621560	100
		PA66 V2 - UL94	-40°c +85°c	450	7,8	125	54	4621270	100	4621570	100
		PA66 V2 - UL94	-40°c +85°c	540	7,8	150	54	4621280	100	4621580	100
		PA66 V2 - UL94	-40°c +85°c	750	7,8	200	54			4621590	100

CABLE CLIPS

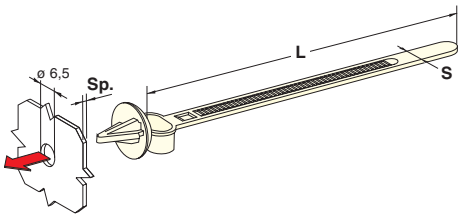

1

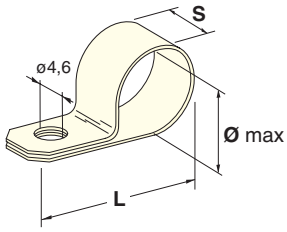

2

IMG	DESCRIPTION	MATERIAL	L mm	S mm	Ø mm	Sp mm		P/N BOX	M.O.Q.
1	REUSABLE TIE	PA66 V2 - UL94	140	6,5	6÷35	0,6÷2		4621051	200
	REUSABLE TIE	PA66 V2 - UL94	100	6	2÷16	0,6÷1,5		4621052	200
2	FIXING TUBE CLAMP	PA66	19,8	9,6	4,8	-		4612110	100
	FIXING TUBE CLAMP	PA66	22	10	6,35	-		4612120	100
	FIXING TUBE CLAMP	PA66	22	10	7,9	-		4612130	100
	FIXING TUBE CLAMP	PA66	24	12	9,5	-		4612140	100
	FIXING TUBE CLAMP	PA66	31	12	12,7	-		4612150	100
	FIXING TUBE CLAMP	PA66	34,3	12	15,8	-		4612160	100
	FIXING TUBE CLAMP	PA66	35	12	19,4	-		4612170	100
	FIXING TUBE CLAMP	PA66	43	12	25,4	-		4612180	100

SWITCHES

PRESS SWITCHES

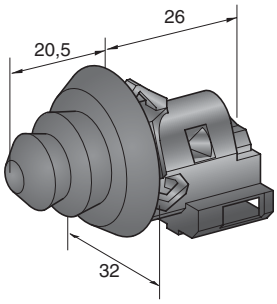

1

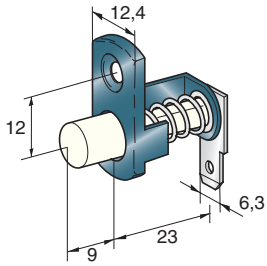

2

IMG	DESCRIPTION	APPLICATION	P/N BOX	M.O.Q.
1	PRESS SWITCH	MULTIFUNCTIONAL - RENAULT	4209655	1
2	PRESS SWITCH	DOORS FIAT RITMO - PANDA - 131 - 132 - 128	4209500	1

PRESS SWITCHES

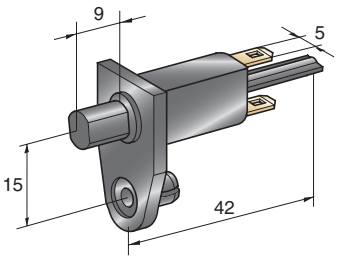

1

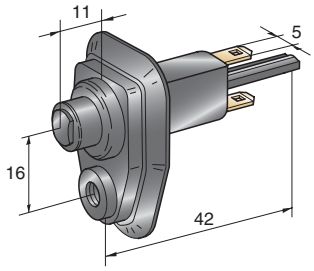

2

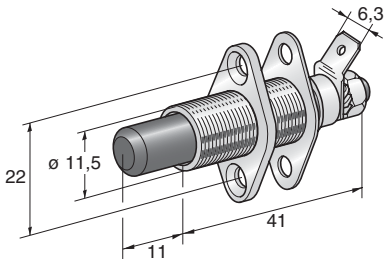

3

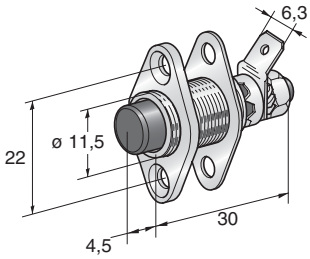

4

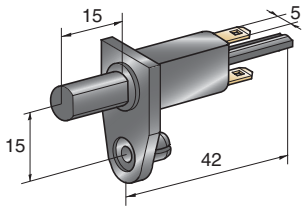

5

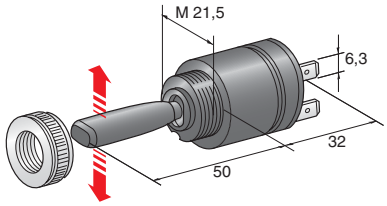

6

IMG	DESCRIPTION	APPLICATION	P/N BOX	M.O.Q.
1	PRESS SWITCH	DOORS FIAT UNO	4209520	1
2	PRESS SWITCH	DOORS FIAT CROMA - LANCIA THEMA	4209530	1
3	PRESS SWITCH	AUTOALARM, DOORS, TAILGATES	4209570	1
4	PRESS SWITCH	AUTOALARM, DOORS, TAILGATES	4209580	1
5	PRESS SWITCH	BOOT ALFA 164	4209590	1
6	PRESS SWITCH	TRACTOR LIGHT	4208800	1

SUNDRIES

RELAYS

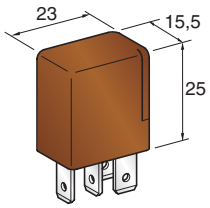

1

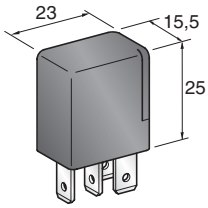

2

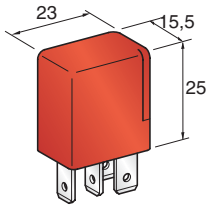

3

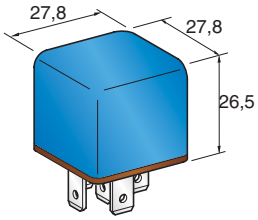

4

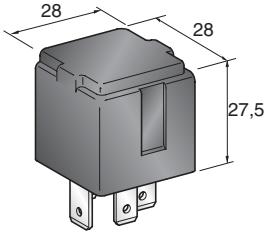

5

IMG	DESCRIPTION	COLOUR	RATED CURRENT WITH 80° C	RATED VOLTAGE	WORKING TEMPERATURE T.min/T.max	P/N BOX	M.O.Q.
1	MICRO RELAY	Brown	10A (NC) - 20A (NO)	12 V	-40°C +125°C	0603000	1
2	MICRO RELAY	Black	20A (NO)	12 V	-40°C +125°C	0603010	1
3	MICRO RELAY	Red	30A (NO)	12 V	-40°C +125°C	0603020	1
4	MINI RELAY	Blue	30A (NO)	12 V	-40°C +125°C	0603040	1
5	MAXI RELAY	Black	50A (NO)	12 V	-40°C +125°C	0603050	1

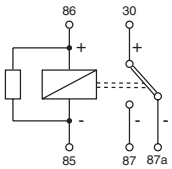

1

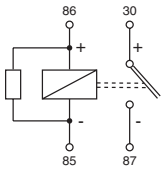

2

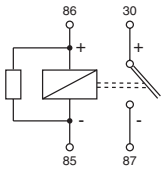

3

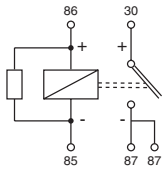

4

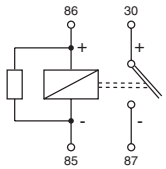

5

SELF EXTINGUISHING INSULATING TAPE

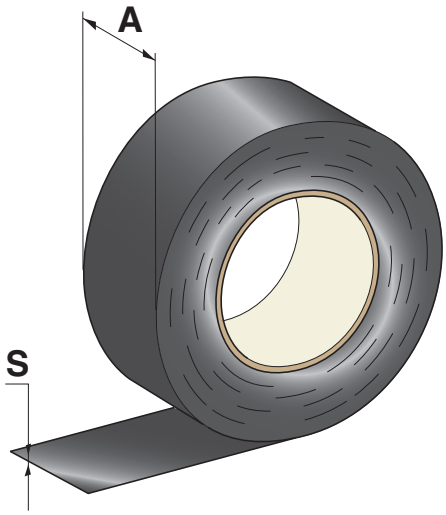

1

IMG	DESCRIPTION	MATERIAL	COLOUR	A mm	L mm	S mm	P/N BOX	M.O.Q.
1	SELF-EXTINGUISHING INSULATING TAPE	PVC - V0	Black	15	10000	0,15	4640100	10
	SELF-EXTINGUISHING INSULATING TAPE	PVC - V0	Red	15	10000	0,15	4640110	10
	SELF-EXTINGUISHING INSULATING TAPE	PVC - V0	Black	15	25000	0,15	4640200	10
	SELF-EXTINGUISHING INSULATING TAPE	PVC - V0	Black	19	25000	0,15	4640300	10
	SELF-EXTINGUISHING INSULATING CLOTH TAPE	RAYON	Black	19	25000	0,28	0100302	96

LAMP HOLDERS

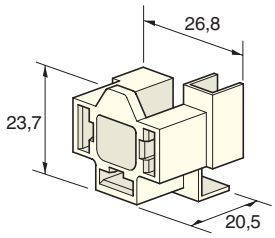

1

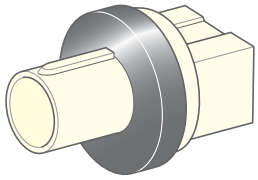

2

IMG	DESCRIPTION	MATERIAL	P/N BOX	M.O.Q.
1	3WAY LAMP HOLDER	PA	4410510	50
2	PARKING LIGHTS AND DASHBOARD FOR LAMPS WITH W 2.1 X 9.5 D SOCKET		4008500	50

CONNECTIONS AND FIXINGS

IMG 1

FASTON F800
W/LOCK.NOTCH

GROUND CONNECTIONS

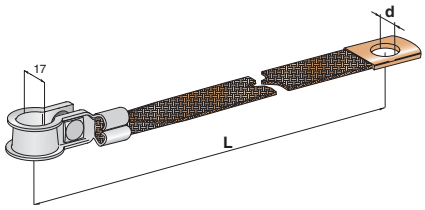

1

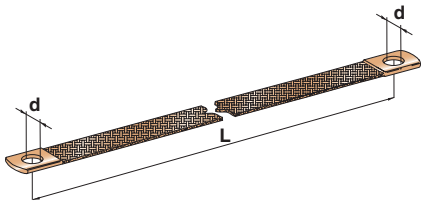

2

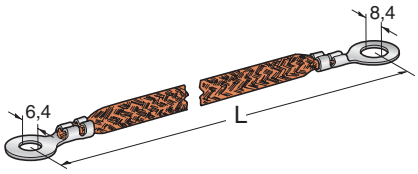

3

IMG	DESCRIPTION	WIRE SECTION mm2	d mm	L mm		P/N BOX	M.O.Q.
1	EARTH CONNECTION	25	12,5	300		2508681	1
		25	12,5	400		2508682	1
		25	12,5	500		2508683	1
2	EARTH CONNECTION	10	8,4	210		2508650	1
		10	8,4	280		2508652	1
		15	10,4	330		2508660	1
		15	10,4	450		2508661	1
		15	10,4	280		2508662	1
		15	10,4	210		2508663	1
		25	12,5	320		2508670	1
		25	12,5	230		2508671	1
		25	12,5	400		2508672	1
3	EARTH CONNECTION	-	-	300		2508220	10

1

2

3

LIST OF ALL ITEMS

P/N	PAGE
0100300	80
0100302	211
0100306	80
0100330	67
0100334	69
0100335	74
0100336	74
0100337	74
0100341	69
0100345	64
0100350	66
0100351	66
0100352	84
0100353	66
0100358	85
0100359	66, 68
0100360	75
0100370	75
0100380	77
0100390	73
0100391	73
0100392	85
0100400	65
0100415	65
0100416	62
0100420	68
0100430	85
0100440	85
0100500	37
0100540	58
0100560	58
0100580	58
0100590	59
0100600	59
0100610	59
0100655	54
0100665	54
0100699	43
0100703	26
0100705	54
0100710	30
0100800	37
0101005	72
0101320	63
0101370	50
0101371	50, 51, 52, 53

P/N	PAGE
0101400	62
0101450	39
0101460	46
0101470	48
0101484	46
0101491	51
0101494	47
0101497	78
0101498	78
0101499	78
0101504	47
0101510	48
0101520	39
0101530	39
0101540	39
0101550	43
0101564	46
0101568	52
0101569	53
0101580	43
0101590	43
0101600	48
0101640	46
0101660	47
0101680	41
0101681	42
0101682	40
0101690	48
0101695	47
0101697	49
0101698	49
0101703	27
0101706	39
0101707	39
0101881	70
0101882	70
0101883	71
0101884	71
0103000	56
0200140	20
0200142	20
0200149	20
0200150	20
0200151	20
0200152	20
0200170	20

P/N	PAGE
0200171	20
0200172	20
0200180	20
0200181	20
0200182	20
0200296	22
0200297	22
0200298	22
0200299	22
0200300	22
0200301	22
0300140	20
0300142	20
0300149	20
0300150	20
0300151	20
0300152	20
0300170	20
0300171	20
0300172	20
0300180	20
0300181	20
0300182	20
0300300	80
0300306	80
0300330	67
0300331	67
0300336	74
0300341	69
0300342	69
0300345	64
0300351	66
0300352	84
0300354	66
0300357	66, 67
0300358	85
0300359	66, 68
0300360	75
0300370	75
0300380	77
0300390	73
0300391	73
0300392	85
0300395	84
0300397	102
0300398	84

P/N	PAGE
0300400	65
0300401	65
0300402	65
0300403	65
0300404	65
0300405	65
0300406	65
0300407	65
0300415	65
0300416	62
0300420	68
0300430	85
0300440	85
0300442	28
0300452	34
0300454	34
0300455	34
0300456	34
0300457	34
0300458	34
0300460	34
0300463	34
0300464	34
0300465	34
0300468	28
0300489	100
0300500	37
0300540	58
0300541	58
0300542	58
0300552	35
0300557	34
0300560	58
0300561	58
0300562	58
0300564	49
0300580	58
0300581	58
0300582	58, 59
0300590	59
0300600	59
0300602	59
0300610	59
0300612	59
0300650	54
0300660	54

P/N	PAGE
0300670	54
0300680	54
0300681	55
0300683	55
0300684	55
0300690	84
0300691	84
0300697	86
0300698	86
0300699	43
0300700	54
0300793	46
0300800	37
0300839	29
0300849	37
0300850	37
0300851	83
0300856	83
0300949	83
0300950	37
0301000	72
0301030	72, 73
0301040	72, 73
0301045	33
0301050	72, 73
0301053	33
0301060	72, 73
0301070	72, 73
0301080	72, 73
0301152	76
0301200	72
0301210	72
0301301	63
0301305	63
0301307	63
0301310	63
0301315	63
0301320	63
0301325	63
0301330	63
0301370	50
0301371	50, 51, 52, 53
0301372	50
0301400	62
0301410	62
0301420	57

P/N	PAGE
0301430	57
0301431	57
0301435	57
0301450	39
0301460	46
0301470	48
0301484	46
0301486	46
0301491	51
0301494	47
0301496	47
0301497	78
0301498	78
0301499	78
0301502	76
0301504	47
0301506	47
0301508	79
0301509	79
0301510	48
0301511	79
0301512	79
0301520	39
0301530	39
0301540	39
0301550	43
0301564	46
0301566	46
0301568	52
0301569	53
0301580	43
0301590	43
0301600	48
0301601	48
0301602	48
0301620	44
0301630	45
0301640	46
0301660	47
0301661	47
0301680	41
0301681	42
0301682	40
0301690	48
0301691	48
0301695	47

P/N	PAGE
0301696	47
0301697	49
0301698	49
0301699	49
0301706	39
0301707	39
0301865	36
0301873	36
0301881	70
0301882	70
0301883	71
0301884	71
0301887	32
0302000	60
0302001	60
0302305	63
0302310	63
0302315	63
0302320	63
0302325	63
0302330	63
0303003	56
0303005	56
0303006	56
0303007	56
0303008	56
0303009	56
0303010	56
0303015	56
0303020	56
0303025	56
0303030	56
0321000	72
0321200	72
0321210	72
0350459	34
0350558	34
0404015	15
0404016	15
0404020	15
0404021	15
0404025	15
0404026	15
0404030	15
0404031	15
0404040	15

P/N	PAGE
0404041	15
0424020	15
0424021	15
0424025	15
0424026	15
0424030	15
0424031	15
0424040	15
0424041	15
0424050	15
0424051	15
0424060	15
0424061	15
0430300	21
0430400	21
0430500	21
0430600	21
0430700	21
0430800	21
0430900	21
0431000	21
0431100	21
0431300	21
0431400	21
0433200	21
0433300	21
0433400	21
0433450	21
0433500	21
0433600	21
0433700	21
0433800	21
0433850	21
0433900	21
0470020	17
0470021	17
0470030	17
0470031	17
0470040	17
0470041	17
0470050	17
0470051	17
0470060	17
0470061	17
0470080	17
0470081	17

P/N	PAGE
0470100	17
0470101	17
0471030	17
0471031	17
0471040	17
0471041	17
0471050	17
0471051	17
0471060	17
0471061	17
0471080	17
0471081	17
0471100	17
0471101	17
0472030	18
0472031	18
0472040	18
0472041	18
0472050	18
0472051	18
0472060	18
0472061	18
0472080	18
0472081	18
0472100	18
0472101	18
0474020	16
0474021	16
0474030	16
0474031	16
0474040	16
0474041	16
0474050	16
0474051	16
0474060	16
0474061	16
0474070	16
0474071	16
0474080	16
0474081	16
0475020	18
0475021	18
0475030	18
0475031	18
0475040	18
0475041	18

P/N	PAGE
0475050	18
0475051	18
0475060	18
0475061	18
0475070	18
0475071	18
0475080	18
0475081	18
0475100	18
0475101	18
0476025	16
0476026	16
0476030	16
0476031	16
0477045	16
0477046	16
0477065	16
0477066	16
0477075	16
0477076	16
0530400	21
0530500	21
0530600	21
0530800	21
0531100	21
0533200	21
0533400	21
0533500	21
0533600	21
0533700	21
0533800	21
0533850	21
0533900	21
0600010	24
0600090	4
0600100	4
0600101	4
0600110	4
0600120	4
0600130	4
0600140	4
0600150	4
0600160	4
0600170	4
0600210	19
0600220	19

P/N	PAGE
0600230	19
0600240	19
0600250	19
0600260	19
0600270	19
0600280	19
0600290	19
0600302	19
0600375	5
0600380	5
0600390	5
0600400	5
0600401	5
0600407	23
0600408	23
0600410	5
0600418	23
0600420	5
0600430	5
0600440	5
0600450	5
0600460	5
0600470	5
0600492	5
0600493	5
0600494	5
0600495	5
0600496	5
0600497	5
0600498	5
0600900	8
0600910	8
0600920	8
0600930	8
0600940	8
0600950	8
0600960	8
0600970	8
0601100	12
0601125	12
0601150	12
0601175	12
0601200	12
0601225	12
0601250	12
0601300	12

P/N	PAGE
0601350	14
0601400	14
0601401	12
0601450	14
0601500	14
0601600	12
0601700	14
0602030	9
0602040	9
0602050	9
0602060	9
0602070	9
0602080	9
0602100	9
0602125	9
0602925	6
0602930	6
0602935	6
0602940	6
0602950	6
0602960	6
0603000	210
0603010	210
0603020	210
0603040	210
0603050	210
0608030	10
0608040	10
0608050	10
0608060	10
0608070	10
0608080	10
0608100	10
0608125	10
0608150	10
0608175	10
0608200	10
0610030	7
0610035	7
0610040	7
0610050	7
0610060	7
0610070	7
0610080	7
0611100	13
0611125	13

P/N	PAGE
0611150	13
0611175	13
0611200	13
0611225	13
0611250	13
0615080	11
0615100	11
0615125	11
0615150	11
0615175	11
0615200	11
0615225	11
0615250	11
0650015	24
0650016	24
0700090	4
0700100	4
0700101	4
0700110	4
0700120	4
0700130	4
0700140	4
0700150	4
0700160	4
0700170	4
0700210	19
0700220	19
0700230	19
0700240	19
0700250	19
0700260	19
0700270	19
0700280	19
0700290	19
0700300	5
0700301	5
0700302	19
0700310	5
0700320	5
0700330	5
0700340	5
0700350	5
0700360	5
0700370	5
0700375	5
0700380	5

P/N	PAGE
0700390	5
0700900	8
0700910	8
0700920	8
0700930	8
0700940	8
0700950	8
0700960	8
0700970	8
0701100	12
0701125	12
0701150	12
0701175	12
0701200	12
0701225	12
0701250	12
0701300	12
0701350	14
0701400	14
0701401	12
0701450	14
0701500	14
0701600	12
0701700	14
0702030	9
0702040	9
0702050	9
0702060	9
0702070	9
0702080	9
0702100	9
0702125	9
0702925	6
0702930	6
0702935	6
0702940	6
0702950	6
0702960	6
0705090	4
0705100	4
0705101	4
0705110	4
0705120	4
0705130	4
0705140	4
0705150	4

P/N	PAGE
0705160	4
0705170	4
0708030	10
0708040	10
0708050	10
0708060	10
0708070	10
0708080	10
0708100	10
0708125	10
0708150	10
0708175	10
0708200	10
0710030	7
0710035	7
0710040	7
0710050	7
0710060	7
0710070	7
0710080	7
0710300	5
0710310	5
0710320	5
0710330	5
0710340	5
0710350	5
0710360	5
0710370	5
0710375	5
0711100	13
0711125	13
0711150	13
0711175	13
0711200	13
0711225	13
0711250	13
0715080	11
0715100	11
0715125	11
0715150	11
0715175	11
0715200	11
0715225	11
0715250	11
1000618	185
1000900	184

LIST OF ITEMS

P/N	PAGE
1000910	184
1000930	184
1101400	157
1101412	159
1101650	157
1101660	159
1101662	159
1101680	158
1101700	157
1101710	157
1101720	158
1101940	164
1101950	164
1102000	162
1102010	162
1102050	163
1104500	161
1104510	161
1105500	160
1105510	160
1105550	160
1105560	160
1105615	162
1105620	162
1105630	162
1105660	163
1105670	163
1106700	131
1106710	131
1106720	131
1106730	131
1106750	131
1106760	131
1107000	158
1107010	158
1107020	158
1107209	163
1107210	162
1107211	162
1107212	163
1107400	154
1107410	154
1107420	154
1107501	153
1107650	155
1107660	155

P/N	PAGE
1107670	155
1107671	155
1107675	155
1107685	155
1107690	155
1107700	155
1107710	155
1107720	155
1107740	156
1107741	156
1107760	154
1107770	154
1107900	153
1107901	153
1107920	153
1107930	153
1107940	153
1107960	166
1107970	166
1107980	166
1107990	152
1107991	152
1107992	152
1107993	152
1108000	166
1108010	163
1108020	163
1108030	162
1108050	162
1108060	162
1108070	163
1108080	163
1108110	133
1108120	133
1108260	161
1108270	161
1108280	162
1108290	161
1108300	161
1108330	150
1108331	150
1108332	150
1108337	150
1108338	150
1108339	150
1108380	149

P/N	PAGE
1108381	149
1108382	149
1108383	149
1108400	151
1108401	151
1108402	151
1108500	152
1108501	152
1108502	152
1108503	152
1108510	152
1108511	152
1108512	152
1108513	152
1200580	185
1200590	185
1200880	167
1201000	165
1201070	165
1201110	165
1201150	166
1201160	166
1201200	165
1201210	165
1201220	165
1201230	165
1301390	157
1301391	157
1301400	157
1301402	157
1301411	159
1301412	159
1301417	159
1301418	159
1301420	158
1301501	158
1301650	157
1301660	159
1301665	159
1400850	167
1400860	167
1400862	167
1400865	167
1400880	167
1401400	157
1506060	124

P/N	PAGE
1506070	124
1506080	124
1506090	124
1506100	124
1506110	124
1506120	124
1506130	124
1506200	125
1506210	125
1506250	125
1506260	125
1506270	124
1506280	124
1506650	122
1506655	122
1506656	122
1506658	122
1506660	122
1506665	122
1506666	122
1506668	122
1506675	122
1506678	122
1506720	122
1506721	122
1506730	122
1506731	122
1506740	123
1506741	123
1506760	123
1506761	123
1506765	123
1506820	125
1507601	121
1507700	119
1507701	119
1507703	119
1507704	119
1507705	119
1507707	119
1507708	119
1507710	119
1507720	119
1507736	119
1507760	119
1507771	119

P/N	PAGE
1507772	119
1507785	119
1507790	119
1507795	119
1507800	120
1507810	120
1507820	120
1507821	120
1507830	120
1507875	120
1507885	120
1507904	121
1507905	121
1507915	121
1507916	121
1507925	121
1507926	121
1507946	121
1507955	121
1507956	121
1507957	121
1507975	121
1508001	119
1602550	129
1602970	129
1602980	129
1602981	129
1602990	129
1603000	129
1604300	132
1605000	148
1605010	148
1605020	148
1605021	148
1605030	148
1605040	148
1605100	148
1605110	148
1605600	136
1605610	136
1605620	136
1605630	136
1605650	136
1605700	136
1605710	136
1605720	136

P/N	PAGE
1605730	136
1605800	136
1605810	136
1605811	136
1605815	135
1605820	136
1605830	136
1605900	136
1605910	136
1605911	136
1605930	136
1606500	140
1606770	140
1606775	140
1606785	140
1606791	140
1606795	140
1606796	140
1606855	178
1606890	140
1606981	138
1606982	138
1606990	138
1606991	138
1606992	138
1606994	138
1606995	144
1607400	144
1607500	141
1607510	142
1608180	133
1608190	133
1608196	133
1608199	133
1608210	132
1608321	132
1608323	132
1608345	138
1608346	138
1608380	141
1608381	141
1608382	141
1608384	141
1608400	143
1608415	144
1608420	143

P/N	PAGE
1608450	143
1608460	143
1608470	143
1608500	141
1608510	141
1608520	145
1608540	147
1608600	145
1608700	145
1608800	133
1608911	146
1609000	129
1609100	145
1609200	132
1609310	147
1609320	133
1609330	133
1609340	133
1609400	146
1609500	146
1609600	146
1609910	145
1609911	145
1609920	145
1609960	147
1617500	141
1701400	157
1701412	159
1701650	157
1701651	157
1701655	157
1701660	159
1701940	164
1704004	141
1704010	141
1704500	161
1704510	161
1705550	160
1705560	160
1705606	134
1705616	134
1705626	134
1705656	134
1705715	134
1705725	134
1705726	135

P/N	PAGE
1705735	134
1705745	134
1705816	135
1705825	135
1705826	135
1705835	135
1705846	135
1705855	135
1705856	135
1705925	135
1706600	140
1706700	131
1706701	131
1706710	131
1706711	131
1706720	131
1706721	131
1706730	131
1706731	131
1706740	131
1706741	131
1706750	131
1706760	131
1706880	140
1706890	140
1706900	137
1706910	137
1706920	137
1706930	137
1706940	137
1706950	138
1706960	138
1706970	138
1706975	139
1706977	139
1706980	138
1706990	138
1707400	154
1707410	154
1707420	154
1707620	155
1707621	155
1707622	155
1707650	155
1707660	155
1707670	155

P/N	PAGE
1707671	155
1707672	155
1707675	155
1707685	155
1707690	155
1707700	155
1707710	155
1707720	155
1707740	156
1707741	156
1707742	156
1707760	154
1707770	154
1707780	154
1707900	153
1707901	153
1707902	153
1707911	153
1707912	153
1707920	153
1707930	153
1707932	153
1707940	153
1707942	153
1707990	152
1707991	152
1707992	152
1707993	152
1707994	152
1707995	152
1708110	133
1708120	133
1708150	130
1708160	130
1708170	132
1708175	132
1708185	139
1708200	138
1708210	132
1708215	132
1708220	138
1708230	132
1708240	134
1708245	134
1708246	134
1708250	135

P/N	PAGE
1708270	139
1708280	134
1708310	132
1708315	132
1708320	132
1708325	132
1708330	150
1708331	150
1708332	150
1708334	150
1708335	150
1708336	150
1708337	150
1708338	150
1708339	150
1708345	138
1708360	144
1708370	144
1708380	149
1708381	149
1708382	149
1708383	149
1708391	149
1708392	149
1708400	151
1708401	151
1708402	151
1708500	152
1708501	152
1708502	152
1708503	152
1708504	152
1708505	152
1708510	152
1708511	152
1708512	152
1708513	152
1793752	142
1793753	142
1793754	130
1796416	142
1850200	171
1850209	171
1850300	171
1850309	171
1850400	171

P/N	PAGE
1850409	171
1850450	172
1850459	172
1850500	171
1850509	171
1851000	171
1851009	171
1851400	171
1851409	171
1851500	171
1851509	171
1852000	172
1852009	172
1852400	173
1852409	173
1852500	172
1852509	172
1853050	169
1853059	169
1853060	169
1853069	169
1853070	169
1853079	169
1853150	169
1853159	169
1853200	169
1853209	169
1853250	169
1854200	171
1854400	171
1854409	171
1854500	171
1854550	172
1854559	172
1855000	171
1855009	171
1855400	171
1855500	171
1855509	171
1856000	172
1856009	172
1856400	173
1856409	173
1857100	169
1857109	169
1857150	169

P/N	PAGE
1857159	169
1857200	169
1857209	169
1857250	169
1857259	169
1860000	178
1860500	171
1860509	171
1861000	171
1861009	171
1862000	172
1862009	172
1862500	172
1862509	172
1863000	171
1863009	171
1863100	169
1863109	169
1863150	169
1863159	169
1863200	169
1863209	169
1863250	169
1863259	169
1863300	169
1863309	169
1864000	174
1864009	174
1864100	174
1864109	174
1864300	174
1864309	174
1864400	174
1864409	174
1864500	174
1864509	174
1864600	174
1864609	174
1864700	174
1864800	174
1865069	170
1865100	170
1865109	170
1865200	170
1865209	170
1866100	170

P/N	PAGE
1866109	170
1866300	170
1866309	170
1867000	170
1867009	170
1867100	170
1867109	170
1867200	170
1867209	170
1868000	175
1868009	175
1868100	175
1868109	175
1868200	175
1868209	175
1869000	175
1869009	175
1869100	175
1869109	175
1869200	175
1880060	177
1880070	177
1880080	177
1880090	177
1880100	177
1880120	177
1880130	177
1880140	177
1880150	177
1880230	177
1880240	177
1880250	177
1880280	176
1880290	176
1880300	176
1880310	176
1900590	185
1900900	184
1900910	184
1900920	184
1900930	184
1900940	184
1901390	157
1901391	157
1901400	157
1901402	157

P/N	PAGE
1901411box	159
1901412box	159
1901417box	159
1901418box	159
1901420box	158
1901501box	158
1901650	157
1901660	159
1901665box	159
1902970	129
1902980	129
1902981	129
1906970	138
1907501box	153
1911400	157
1911650	157
1951145box	158
1951194	159
2508220	213
2508650	213
2508652	213
2508660	213
2508661	213
2508662	213
2508663	213
2508670	213
2508671	213
2508672	213
2508681	213
2508682	213
2508683	213
2550087	198
3001001	73
3004000	23
3050123	105
3050124	105
3050125	105
3050126	105
3050127	105
3050128	105
3050129	105
3050130	105
3050131	106
3050132	106
3050133	106
3050134	106

P/N	PAGE
3050135	81
3050136	81
3050152	62
3050153	63
4008500	212
4208800	208
4209500	207
4209520	208
4209530	208
4209570	208
4209580	208
4209590	208
4209655	207
4407510	161
4407530	160
4407740	160
4407750	160
4410060	115
4410062	116
4410065	115
4410068	115
4410070	115
4410072	115
4410073	115
4410074	115
4410076	115
4410077	116
4410078	116
4410079	116
4410080	115
4410082	115
4410083	115
4410084	115
4410086	115
4410090	173
4410091	173
4410092	173
4410096	173
4410097	173
4410150	110
4410160	110
4410170	110
4410180	110
4410190	110
4410200	110
4410210	111

P/N	PAGE
4410220	111
4410230	111
4410240	111
4410245	81
4410246	81
4410247	81
4410250	111
4410260	111
4410270	112
4410280	112
4410290	112
4410295	112
4410296	112
4410300	187
4410310	187
4410320	187
4410360	187
4410400	187
4410480	127
4410495	126
4410496	126
4410510	212
4410605	102
4410610	102
4410655	109
4410656	109
4410660	108
4410661	108
4410801	97
4410810	98
4410811	98
4410820	98
4410821	98
4410830	97
4410840	96
4410870	99
4410880	96
4410881	96
4410890	96
4410891	96
4410921	98
4410970	99
4420800	116
4420900	108
4420901	108, 186
4420902	108, 186

P/N	PAGE
4420910	108
4420911	108, 186
4420920	109
4420921	109, 186
4420931	109, 186
4423510	107
4423520	107
4423530	107
4423540	107
4423550	107
4423560	107
4423610	105
4423620	105
4423630	105
4423640	105
4423650	105
4423660	105
4423670	105
4423680	105
4423690	106
4423700	106
4423710	106
4423720	106
4426030	113
4426040	113
4426050	113
4426060	113
4426110	113
4426120	113
4426130	114
4426140	114
4426150	114
4426160	114
4426170	114
4426180	114
4430100	117
4430110	117
4430120	117
4430130	117
4433800	107
4440100	88
4440200	88
4440300	90
4440310	91
4440340	91
4440400	90

P/N	PAGE
4440600	101
4440700	93
4440800	93
4441100	101
4441200	101
4507510box	161
4507740box	160
4510070	115
4510073	115
4510074	115
4510076	115
4510077	116
4510080	115
4510086	115
4510090	173
4510091	173
4510092	173
4510096	173
4510110	104
4510115	104
4510120	103
4510125	103
4510130	104
4510135	103
4510145	104
4510150	110
4510160	110
4510170	110
4510180	110
4510190	110
4510200	110
4510210	111
4510220	111
4510230	111
4510240	111
4510245	81
4510247	81
4510250	111
4510260	111
4510270	112
4510280	112
4510290	112
4510295	112
4510296	112
4510400	187
4510480	127

P/N	PAGE
4510496	126
4510497	126
4510499	126
4510502	127
4510503	127
4510658	161
4510662	161
4510801	97
4510802	97
4510810	98
4510811	98
4510812	98
4510820	98
4510821	98
4510830	97
4510840	96
4510870	99
4510875	99
4510880	96
4510881	96
4510890	96
4510891	96
4510921	98
4510970	99
4510975	99
4520900	108
4520901	108, 186
4520902	108, 186
4520910	108
4520911	108, 186
4520921	109, 186
4520931	109, 186
4540105	88
4540110	94
4540111	94
4540112	94
4540113	94
4540150	89
4540205	88
4540210	94
4540211	94
4540212	94
4540302	90
4540303	92
4540305	90
4540312	91

P/N	PAGE
4540315	91
4540325	91
4540335	91
4540345	91
4540405	90
4540410	91
4540420	91
4540430	91
4540500	92
4540501	92
4540502	92
4540503	92
4540601	101
4540602	101
4540705	93
4540715	93
4540735	93
4540805	93
4540815	93
4540816	95
4540817	95
4541100	101
4541200	101
4541201	101
4541202	101
4541203	31
4541204	31
4545100	88, 90, 91, 93
4545200	88
4545300	90, 91, 92, 93
4545400	90
4545800	93
4550747box	150
4550748box	150
4550749box	150
4550750box	150
4550780	154
4550781	154
4550782	154
4550784	154
4551575	186
4551605	102
4551606	102
4551607	102
4551610	102
4551611	102

P/N	PAGE
4551612	102
4551613	102
4551614	102
4551615	102
4551747	150
4551748	150
4551749	150
4551897	95
4551898	95
4551899	95
4551900	95
4551901	152
4551902	152
4612110	205
4612120	205
4612130	205
4612140	205
4612150	205
4612160	205
4612170	205
4612180	205
4621051	205
4621052	205
4621110	204
4621120	204
4621130	204
4621140	204
4621150	204
4621170	204
4621180	204
4621190	204
4621200	204
4621210	204
4621240	204
4621260	204
4621270	204
4621280	204
4621400	204
4621410	204
4621420	204
4621430	204
4621440	204
4621450	204
4621460	204
4621470	204
4621480	204

P/N	PAGE
4621490	204
4621500	204
4621510	204
4621520	204
4621530	204
4621540	204
4621550	204
4621560	204
4621570	204
4621580	204
4621590	204
4640100	211
4640110	211
4640200	211
4640300	211
4814220	199
4814221	199
4814222	199
4814250	200
4814251	199
4814252	199
4814254	201
4814255	199
4814256	199
4814257	199
4814258	199
4814259	199
4814261	202
4814262	199
4814264	199
4814267	200
4814268	200
4814271	202
4814272	202
4814281	202
4814282	202
4814290	202
4814291	202
4814295	202
4814311	200
4814321	200
4814330	201
4814331	201
4814332	201
4814341	202
4814350	202

P/N	PAGE
4814351	202
4814361	202
4814373	202
4814375	202
4914221	199
4914222	199
4914256	199
4914257	199
4914258	199
4914259	199
4914262	199
4914264	199
4914265	201
4914266	201
4914267	200
4914268	200
4914312	200
4914313	200
4914322	200
4914323	200
4914326	201
4914327	201
5014861	189
5014862	189
5014873	189
5014877	189
5014900	189
5014901	189
5050090	189
5050097	189
5050103	189
5050106	192
5050108	189
5050121	189
5050123	189
5050124	189
5050126	190
5050127	190
5050128	191
5050133	192
5050136	190
5050140	190
5050143	190
5050147	190
5050155	190
5050156	190

P/N	PAGE
5050227	190
5051108	191
5056000	189
5056005	189
5056008	189
5114861	189
5114901	189
5151137	191
5515870	192
7050081	196
7050088	195
7050090	194
7050091	194
7050092	195
7050096	195
7050100	195
7050101	195
7057081	196
7057088	195
7057091	194, 195
7057092	195
7057093	195
9602450	181
9602455	181
9602460	182
9602490	180
9602500	182
9815530	198
9815550	198
9815560	198
9815561	198
9815562	198

A norma della legge sul diritto d'autore e del codice civile, è tassativamente vietata la riproduzione di questo catalogo o parte di esso, con qualsiasi metodo elettronico, meccanico, per mezzo di fotocopie, microfilm, registrazioni o altro. I diritti sono riservati per tutti i paesi.

According to the copyright and the civil law, the reproduction of this catalogue, or any part of this one, by electronic, mechanical methods, by means of photocopies, microfilms, recordings or other, is peremptorily forbidden. Rights are reserved for all countries.

Disegni, caratteristiche e codifiche, possono essere soggetti a modifiche e variazioni. Al fine di un miglioramento tecnologico e qualitativo. MTA S.p.A. si riserva la facoltà di effettuare cambiamenti senza nessun preavviso.

Drawings, specifications and reference numbers may be modified and changed. MTA S.p.A. reserves itself the right, to make changes for technical or quality improvements, without any notice.

I prodotti di questo catalogo sono destinati ad uso industriale e professionale e devono essere installati e manovrati da persone qualificate.
L'acquirente è tenuto ad informare l'utilizzatore finale dei rischi connessi al loro errato utilizzo (es folgorazione, scoppio ecc).
Il venditore deve tenersi esonerato da qualsiasi uso improprio e/o derivante anche e non solo da omessa e/o insufficiente informazione relativa ai prodotti di cui sopra ed al loro uso.

The products in this catalogue are intended for industrial and professional use and must be installed and operated by qualified personnel.
The buyer is obliged to inform the end user of the risks associated with the misuse of the products (e.g. electric shock, explosion, etc.).
The seller shall be held exempt from any use that is improper and/or arising also and not only from omitted and/or insufficient information relating to the above products and their use.

Per conoscere i distributori di MTA nel mondo potete consultare il sito www.mta.it

To know MTA agents and distributors in the world please go to www.mta.it

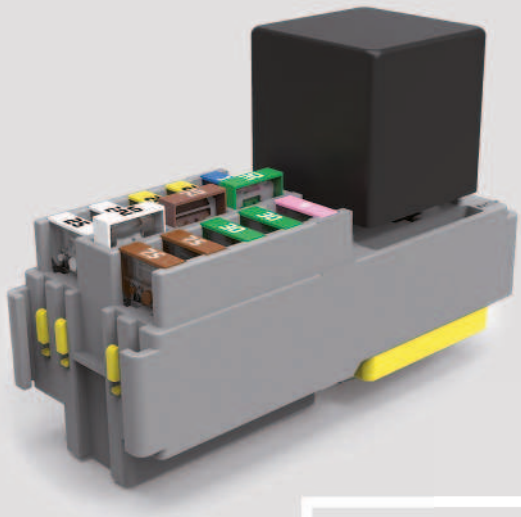

Advanced Automotive Solutions

ITALY
BRAZIL
POLAND
SLOVAKIA
USA
INDIA
CHINA
MEXICO
MOROCCO

www.mta.it

Ref. 9951220

8 010266 113705