FILE: D02\TL02\TLF\100\TLF-100W-A-XXP-XS

REV	E.C.N NO.	CONTENT	CHK	DATE
V0.0		ORIGINAL	YHZ	18.04.16

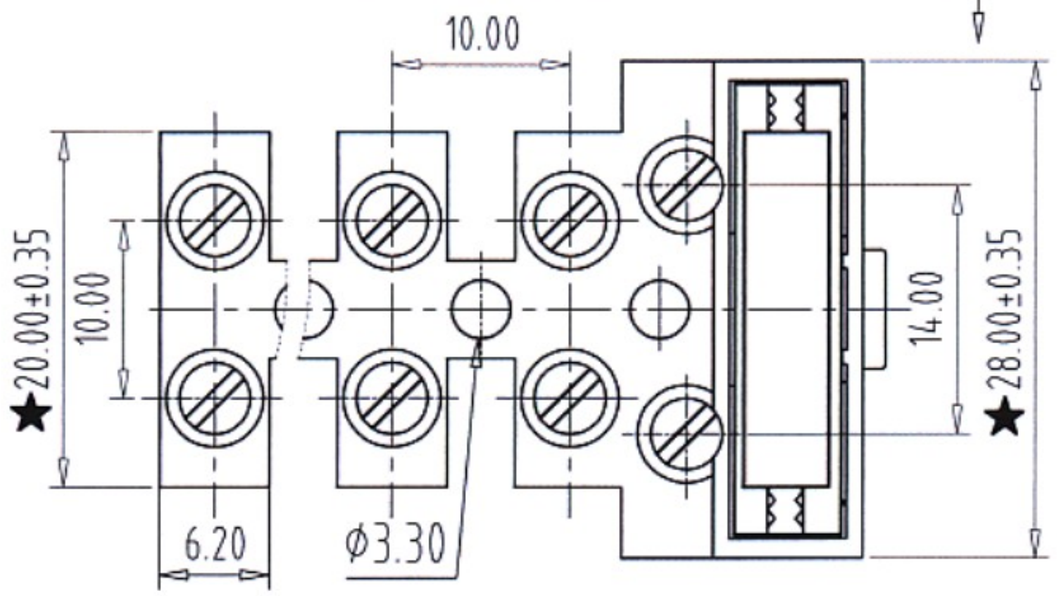

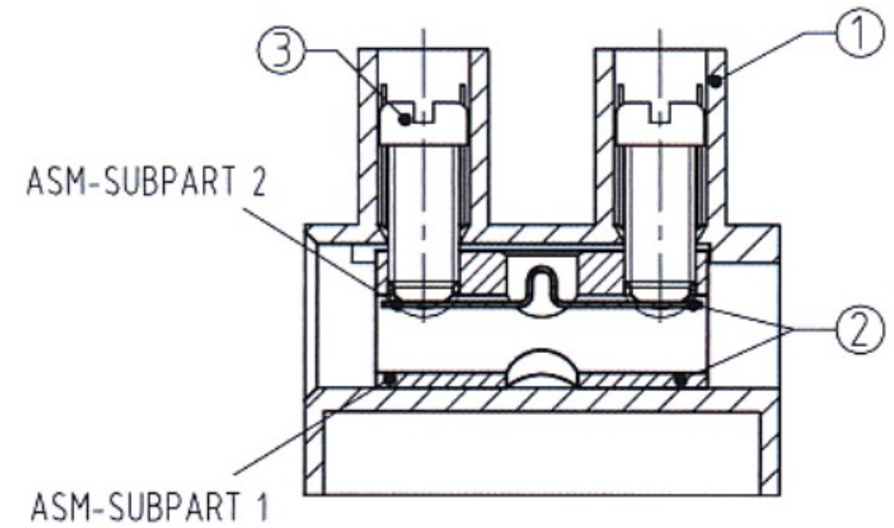

SECTION:A–A

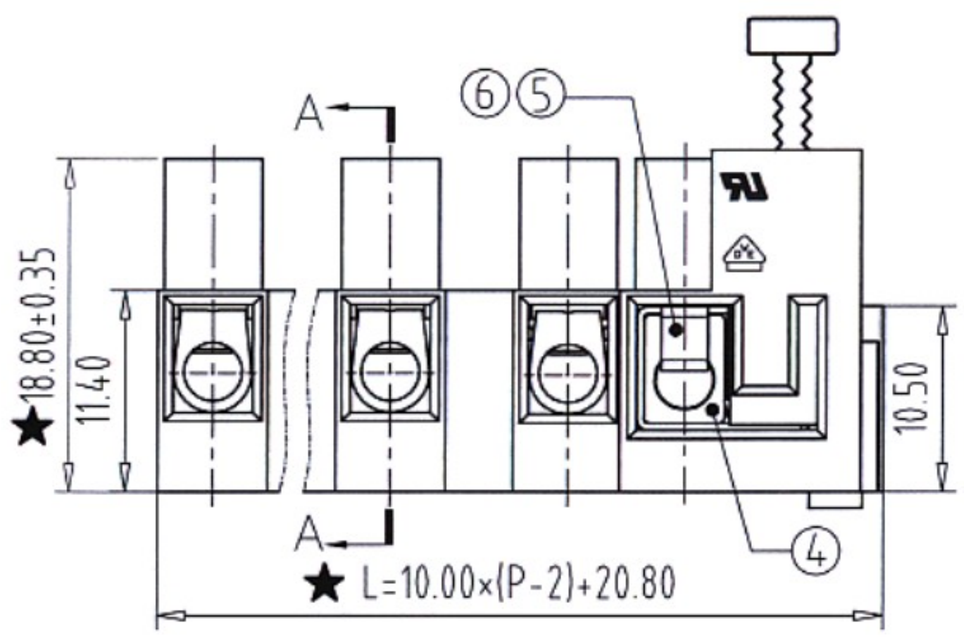

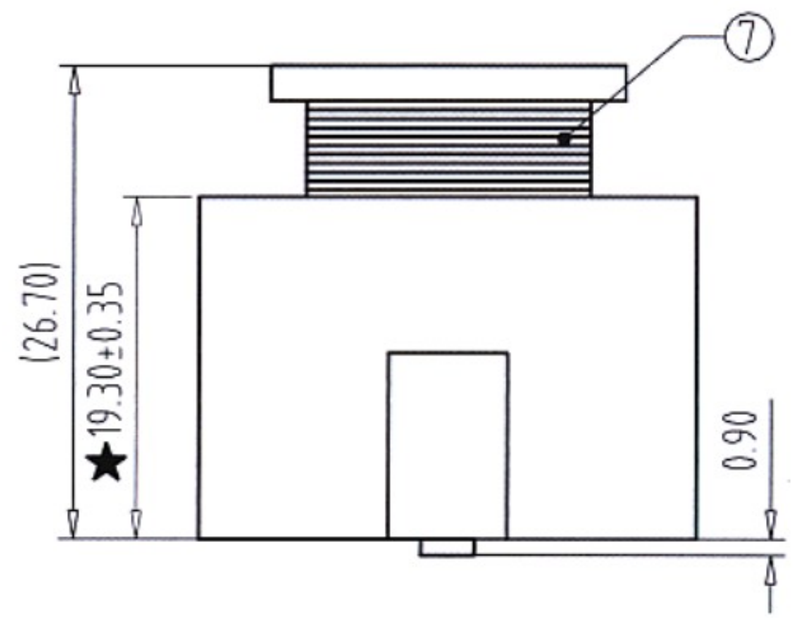

NOTES:

1. Rating:Terminal Block 450V 24A(VDE);300V 20A(UL)
   Fuse holder 250V 6.3A(VDE);300V 13A(UL)
2. Insulation Withstands Voltage: Terminal Block: AC2500V/Min
   Fuse holder : AC2000V/Min
3. Insulation Resistance: 500M Ω or more at DC500V
4. Using Temperature Range: Terminal Block:-30°C/+100°C(VDE)
   Terminal Block:-30°C/+105°C(UL)
   Fuse holder :-30°C/+40°C(UL)
   Fuse holder :-30°C/+40°C(VDE)
5. Screw Torque Vlaue:0.5N.m Max
6. Suitable Electric Wire: 0.5mm²-2.5mm²(VDE)
   Terminal Block: 18-12AWG(UL)
   Fuse Holder: 20-14AWG(UL)
7. "★" the important dimension.
8. RoHS compliance

备注：插片⑦无需组装，单独包装发货

DIM \ P	2	3	4	5	6
L	20.80	30.80	40.80	50.80	60.80
TOL(±)	0.35	0.40	0.45	0.50	0.55

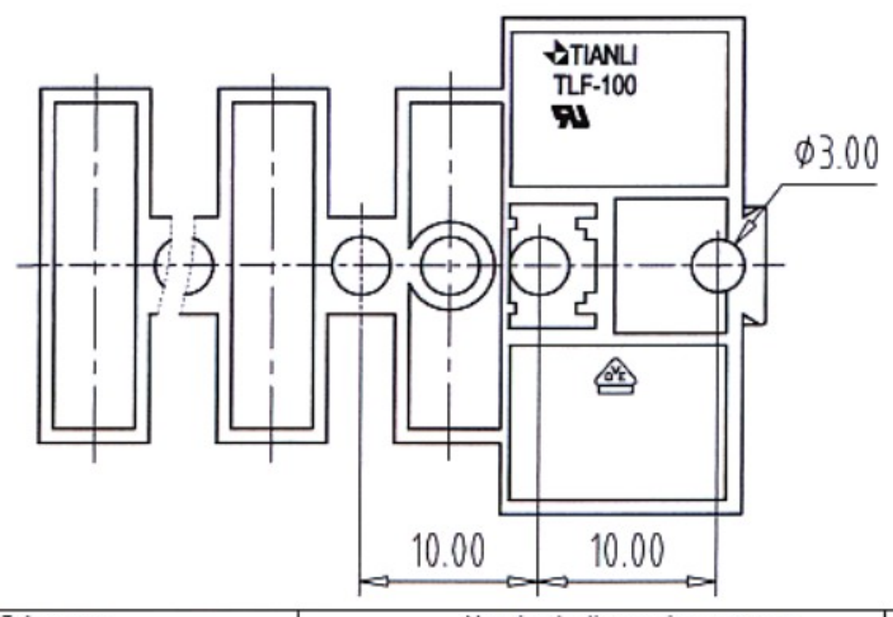

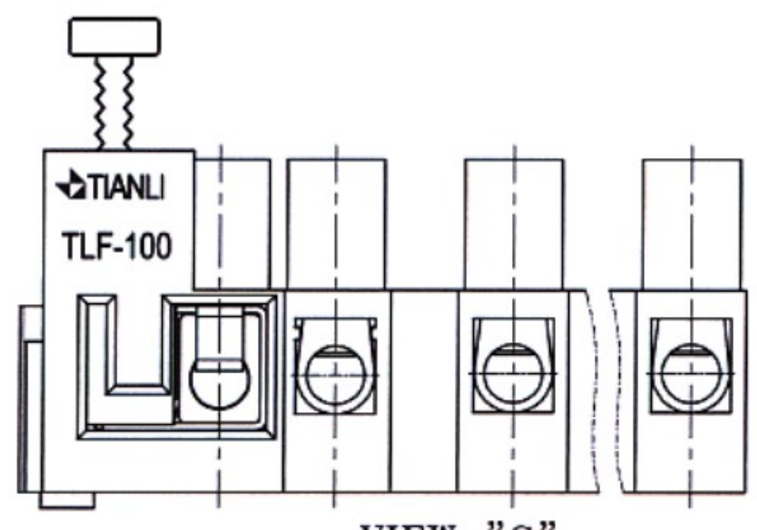

VIEW "G"
Rotate 180°

ITEM	NAME OF PART	NO. OF PART	Q"TY	MATERIAL	NOTE
7	INSERT PIECE	TL019C1XXX	1	PA66(G25V0)	
6	SPRING COIL	TLB19B0013	1	BRONZE	Front
5	SPRING COIL	TLB19B0014	1	BRONZE	Back
4	F-BLOCK	TLX00058	2	BRASS	Ni Plated
3	SCREW	TLS00054	2P	STEEL	M3/Zn Plated
2	BLOCK-ASM	TLB19B0026	P-1	Brass/ Stainless Steel	
	ASM-SUBPART 1	TERMINAL (TLB19B0015)		BRASS	Ni Plated
	ASM-SUBPART 2	SPRING-COIL (TL019B0009)		Stainless Steel	
1	HOUSING	TL019C3XXX	1	PA66(G25V0)	

DWG.	YHZ	DATE	18.04.16	UNITS	MM
CHK.		DATE		SCALE	1.5 : 1
APP.		DATE	18.04.18		

SHEET/OF 1/1 A4

NAME: TLF-100W-A-XXP-XS

DWGNO. TL-02-TLF-100W-A-XXP-XS

TIANLI ELECTRICAL MACHINERY(NINGBO)CO.,LTD.

Total Pitch Tolerances in mm									Nominal dimension range in mm									⊥		÷	—		//
over 0 to 30	over 30 to 53	over 53 to 70	over 70 to 90	over 90 to 115	over 115 to 150	over 150 to 200	over 200 to 250	over 250 to 320	over 0 to 30	over 30 to 53	over 53 to 70	over 70 to 90	over 90 to 115	over 115 to 150	over 150 to 200	over 200 to 250	over 250 to 320	over 0 to 10	over 10	all	over 0 to 100	over 100 to 150	over 150
±0.18	±0.20	±0.25	±0.3	±0.35	±0.44	±0.55	±0.70	±0.75	±0.20	±0.25	±0.30	±0.35	±0.44	±0.55	±0.70	±0.80	±0.90	0.2	0.3	0.3	0.2	0.3	0.5