FILE 2013-D02\TL02\TL\TL212\TL212V-T-XXP-XS

REV	E.C.N. NO.	CONTENT	CHK	DATE
V0.0		ORIGINAL	陈小龙	12.11.17
V1.0		修改电气参数	李家振	13.03.22
V2.0		依认证修改技术参数	LZT	14.08.20
V3.0		根据实物修改出脚长度公差	LZT	14.12.12
V4.0	S1710007	设变成品品名并增加铁方盒描述 ⚠10	wangw	17.10.14

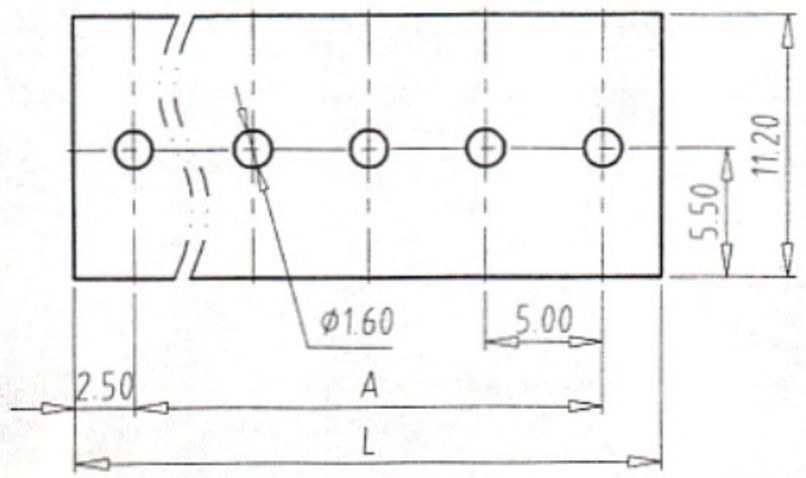

PCB LAYOUT
S=2:1

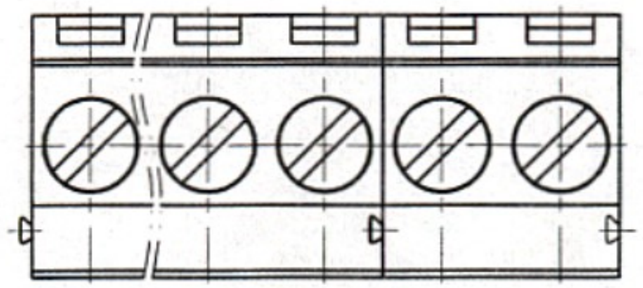

NOTES:

1. Rating:300V/20A(UL), 300V/20A(VDE);
2. Insulation Withstands Voltage:AC2000V/1MIN;
3. Insulation Resistance:500MΩ or more at DC500V;
4. Using Temperature Range:-40℃--+105℃;
5. Screw Torque Vlaue:0.4N.m Max;
6. ⚠10 Suitable Electric Wire:12-24AWG, 0.34-4.0mm²;
7. ⚠10 Stripping Length:7-8mm; ⚠20
8. ⚠10 "★☆" the important dimension;
9. RoHS compliance.

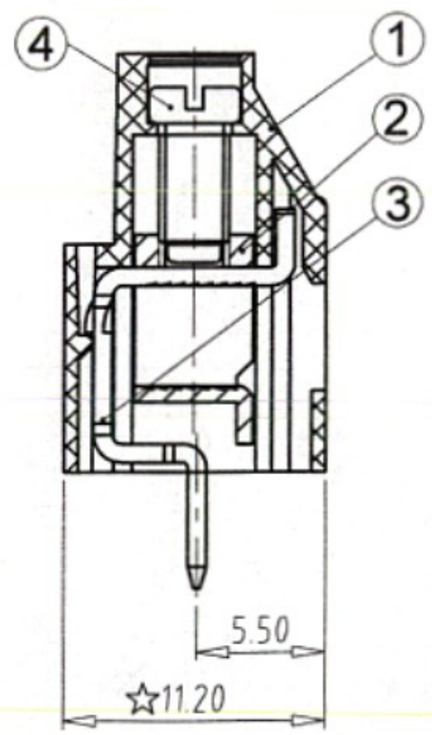

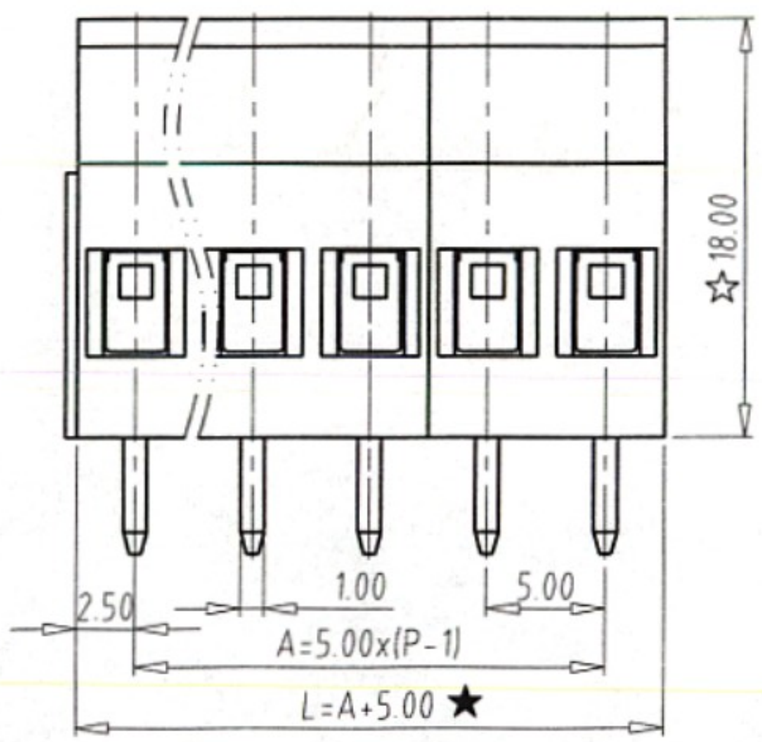

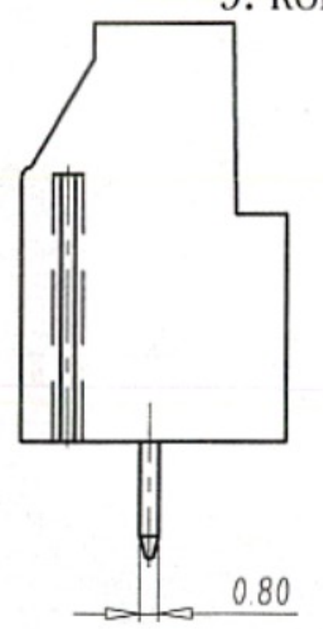

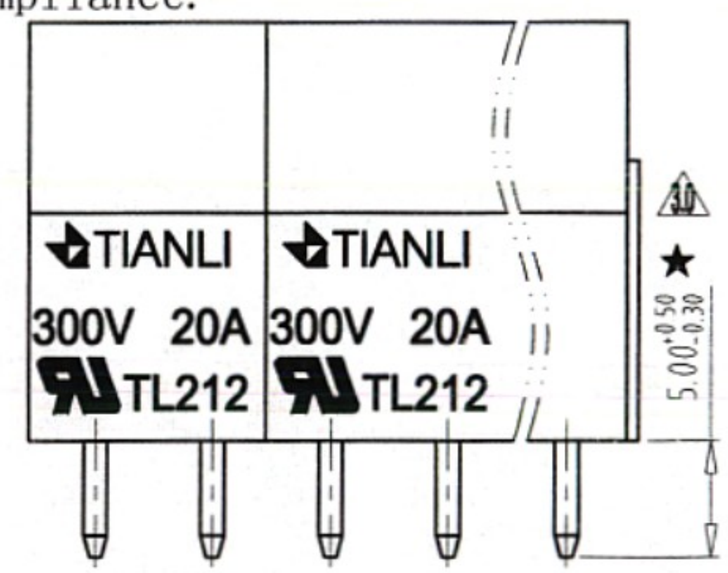

DIM \ P	2	3	4	5	6	7	8	9	10	11	12	13
L	10	15	20	25	30	35	40	45	50	55	60	65
A	5	10	15	20	25	30	35	40	45	50	55	60
DIM \ P	14	15	16	17	18	19	20	21	22	23	24	
L	70	75	80	85	90	95	100	105	110	115	120	
A	65	70	75	80	85	90	95	100	105	110	115	

Total Pitch Tolerances in mm									Nominal dimension range in mm									⊥		÷	—		//
over 0 to 30	over 30 to 53	over 53 to 70	over 70 to 90	over 90 to 115	over 115 to 150	over 150 to 200	over 200 to 250	over 250 to 320	over 0 to 30	over 30 to 53	over 53 to 70	over 70 to 90	over 90 to 115	over 115 to 150	over 150 to 200	over 200 to 250	over 250 to 320	over 0 to 10	over 10	all	over 0 to 100	over 100 to 150	over 150
±0.18	±0.20	±0.25	±0.3	±0.35	±0.44	±0.55	±0.70	±0.75	±0.20	±0.25	±0.30	±0.35	±0.44	±0.55	±0.70	±0.80	±0.90	0.2	0.3	0.3	0.2	0.3	0.5

ITEM	NAME OF PART	NO. OF PART	Q"TY	MATERIAL	NOTE
4	SCREW	TLS00111	P	STEEL	Zn Plated
3	SOLDERPIN	TL004B0001	P	BRASS	Tin Plated
2	BLOCK	TLX00026	P	STEEL	Zn Plated
1	HOUSING	TL003D90XX(2P) TL003D91XX(3P)	/	PA66	UL94-V0

DWG	李家振	DATE	13.03.22	UNITS	MM	SHEET/OF	1/1
CHK.	[illegible]	DATE	17.10.17	SCALE	2:1	A4	
APP.		DATE		NAME	TL212V-T-XXP-XS ⚠10 ~~TL212V-XXP-XS~~		
TIANLI ELECTRICAL MACHINERY(NINGBO)CO.,LTD				DWGNO	TL-02-TL212VTXXPXS		