REV.	DESCRIPTION	DRAWN	CHECKED	APPROVED
A	NEW RELEASE	HP 07/12/05'	~	LJC 07/12/05'
B	CHANGE THE DIM	YCH 08/17/13'	~	LJC 08/17/13'

TECHNICAL DATA

1. MATERIAL
   . Pin(Outer Sleeve): Brass,Machined,CuZn38Pb2
   . Clip(Contact 3/4/6 Finger): Copper alloy,Heat Treated
2. ELECTRICAL
   . Current Rating: 3A Per Pin max.
   . Contact Resistance: ≦20mΩ/Contact.

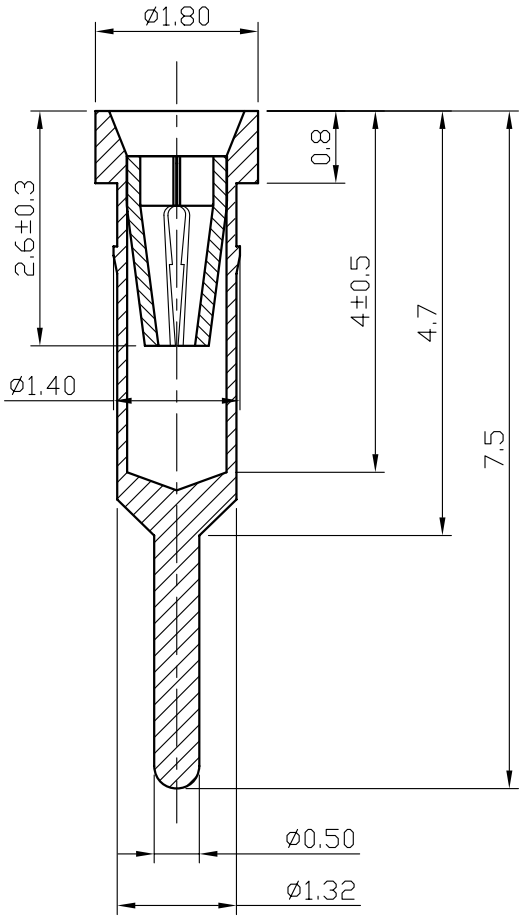

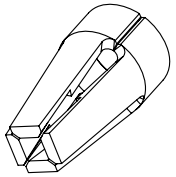

clip figure(4 fingers)

3. MECHANICAL
   . *Average Insertion Force With Steel Pin of ø0.43mm/0.017":
     4-Finger≦270g,6-Finger≦120g
   . *Average Withdrawal Force With Steel Pin of ø0.50mm/0.020":
     4-Finger≧25g,6-Finger≧15g
   . *Mechanical Life: min 200 Cycles
4. PRODUCT NUMBER CODE:

DS1005-09 - X X X

CLIP PLATED
- 6: Full Tin
- 8: Full Gold flash
- C: Full Gold 3u"
- A: Full Gold 10u"
- B: Full Gold 15u"

PIN PLATED
- 6: Full Tin
- 8: Full Gold flash
- C: Full Gold 3u"
- A: Full Gold 10u"
- B: Full Gold 15u"

CLIPS
- 3: 3Finger
- 4: 4Finger
- 6: 6Finger

SERIES NO
DS1005-09

GENERAL TOLERANCE	ANGLE TOLERANCE
X. ±0.20	X. ±2°
.X ±0.10	.X ±1°
.XX ±0.05	.XX ±0.5°

DRAWING TYPE	CUSTOMER		
SCALE	1:1	SHEET	1 OF 1
DRAWING NO.	C-DS1005-09-XXX-B		

PROJECTION		TITLE	SOCKET TERMINALS 7.43mm
UNITS	mm		
SHEET SIZE	A4	SERIES	DS1005-09

晨翔电子有限公司
CONNFLY CONNFLY ELECTRONIC CO., LTD