嘉尼企業股份有限公司 CANAL ELECTRONIC CO.,LTD.

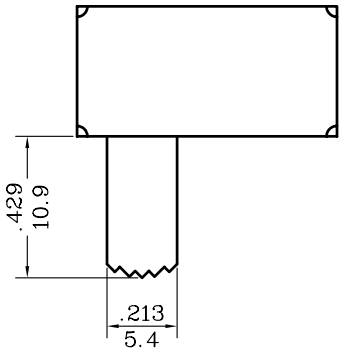

SCHEMATIC DIAGRAM

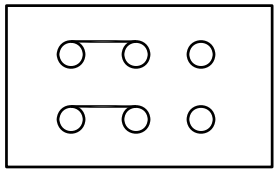

SLIDE SWITCH: MODEL SL13

RATING: 1A 125VDC
CIRCUIT: DOUBLE POLES DOUBLE THROW
CONTACT RESISTANCE: 20mΩ (MAX)
DIELECTRIC STRENGTH: 1000VAC FOR 1 MINUTE
CYCLE: 100,000
OPERATION FORCE: 300±200g

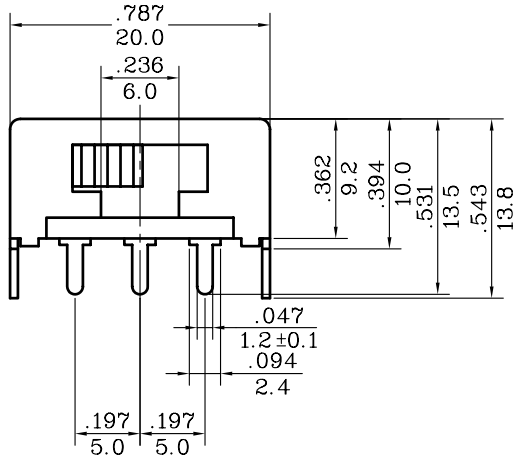

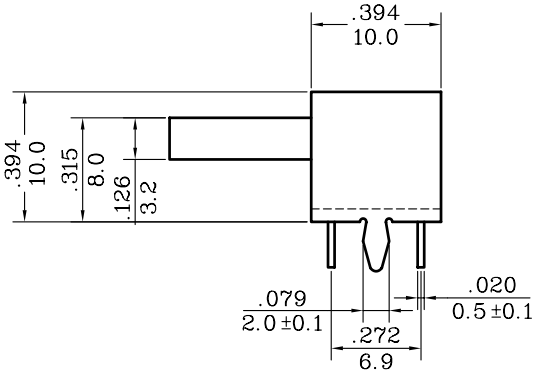

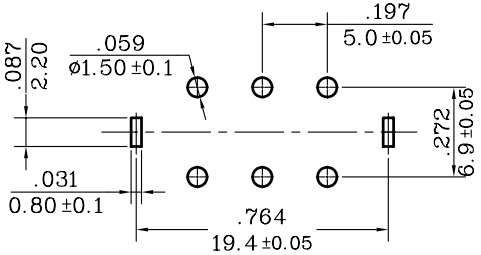

P.C.BOARO HOLE

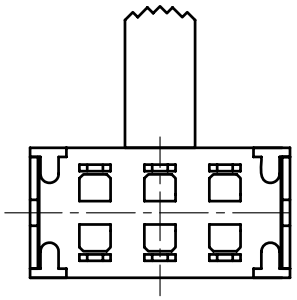

NOTE: 1. TOLERANCES UNLESS OTHERWISE SPECIFIED: $\pm\frac{.012}{0.3}$ (in/mm)
2. IT IS IN COMPLIANCE CANAL ROHS SPECIFICATION: WI-QA-24

嘉尼企業股份有限公司 研發部
2006.04.03
發圖章

REVISION	DESCRIPION	REVISED BY	TOLEANCES .X .XX ANGLE ½°					UNIT mm	PART NAME	SL13規格圖	DWG NO
△			DRAWN BY	馮紅崗	DESIGNED BY	馮紅崗	SCALE	5/3			SI265A
△			CHECKED BY		APPROVED BY		DATE	2003.03.05	PART NO	SL13-(212)C	
△ 2006.02.24	更換圖框,重新出圖	盧小輝									