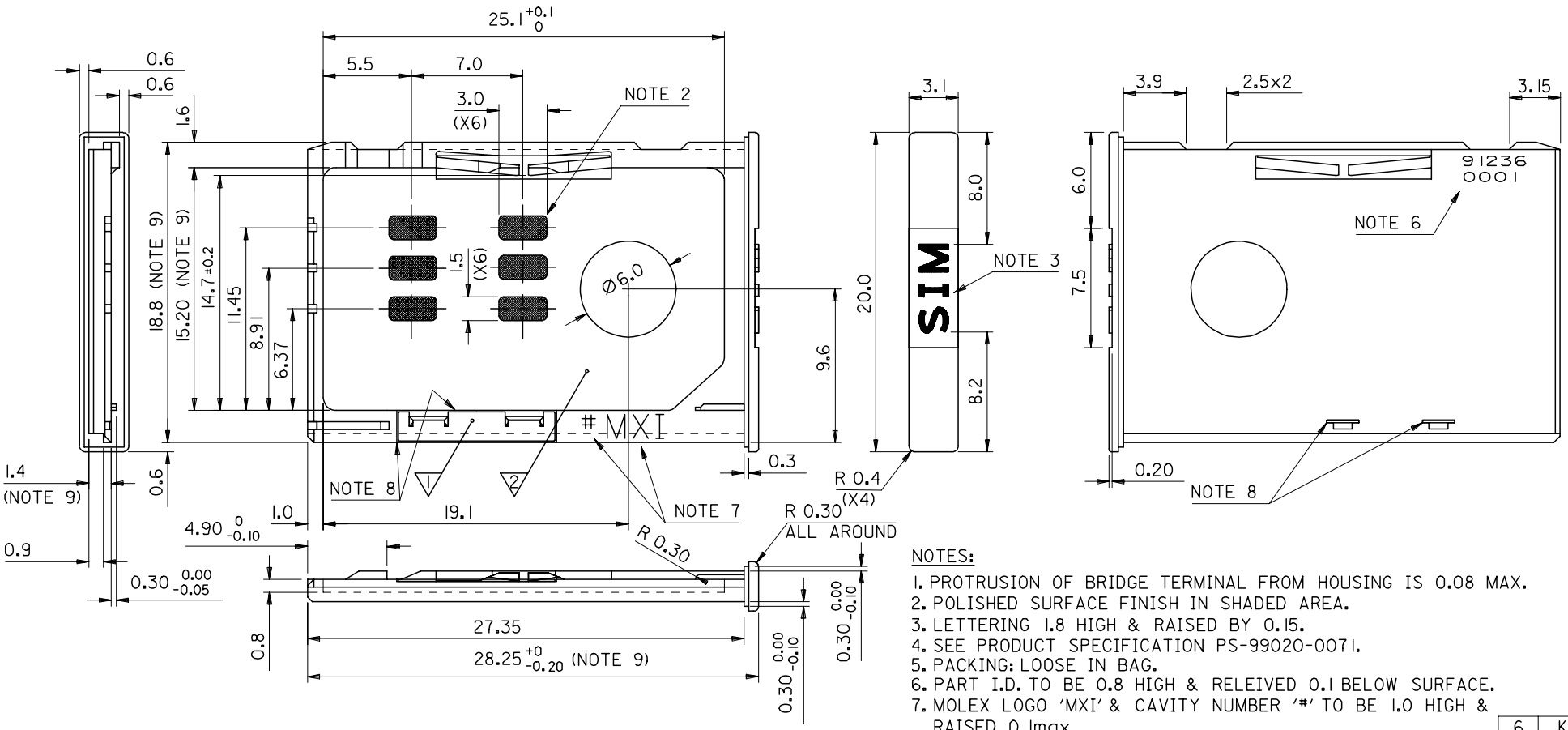

NOTES:

1. PROTRUSION OF BRIDGE TERMINAL FROM HOUSING IS 0.08 MAX.
2. POLISHED SURFACE FINISH IN SHADED AREA.
3. LETTERING 1.8 HIGH & RAISED BY 0.15.
4. SEE PRODUCT SPECIFICATION PS-99020-0071.
5. PACKING: LOOSE IN BAG.
6. PART I.D. TO BE 0.8 HIGH & RELEIVED 0.1 BELOW SURFACE.
7. MOLEX LOGO 'MXI' & CAVITY NUMBER '#' TO BE 1.0 HIGH & RAISED 0.1max.
8. BRIDGE TERMINAL MUST NOT PROTRUDE BEYOND EDGES SHOWN
9. APPLICABLE DIMENSIONS FOR PROCESS CAPABILITY STUDY

ITEM	COMPONENT	QTY	MATERIAL
1	TERMINAL	1	0.15 PHOSPHOR BRONZE 0.1um MIN Au OVER Pd/Ni IN CONTACT AREA
2	HOUSING	1	GF PBT, BLACK

6	K
5	F
4	G
3	J
2	G
1	M

MODIFY DIMENSION
EC NO: E2005-0317 2004/11/29
DRWN:FDUGGAN 2004/11/29
CH'KD: 2004/11/30
APPR:EFOLAN
DESCRIPTION
REV M

QUALITY SYMBOLS
▼=0
(C)=0

GENERAL TOLERANCES (UNLESS SPECIFIED)

	mm	INCH
4 PLACES	± ---	± ---
3 PLACES	± ---	± ---
2 PLACES	± 0.05	± ---
1 PLACE	± 0.10	± ---
ANGULAR ± 2 °		

DRAFT WHERE APPLICABLE MUST REMAIN WITHIN DIMENSIONS

DIMENSION STYLE: MM ONLY
SCALE: ---
DESIGN UNITS: METRIC
THIRD ANGLE PROJECTION

DRAWN BY: F INDORAK DATE: 00/08/28
CHECKED BY: DHANNON DATE: 00/08/28
APPROVED BY: MWILHITE DATE: 00/08/28

TITLE: CARD HOLDER

molex MOLEX INCORPORATED

MATERIAL NO.: 91236-0001
DOCUMENT NO.: SDA-91236
SHEET NO.: 1 OF 6
SIZE: A3

THIS DRAWING CONTAINS INFORMATION THAT IS PROPRIETARY TO MOLEX INCORPORATED AND SHOULD NOT BE USED WITHOUT WRITTEN PERMISSION

tb_frame_A3_P_ME_T
Rev. D 2004/04/02