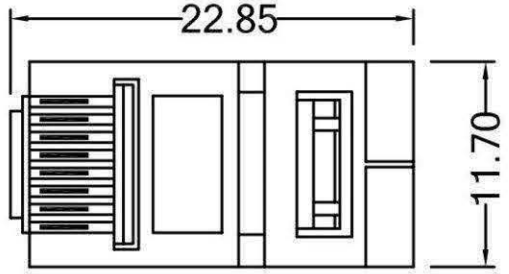

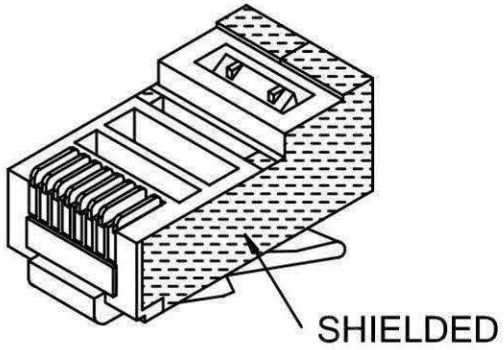

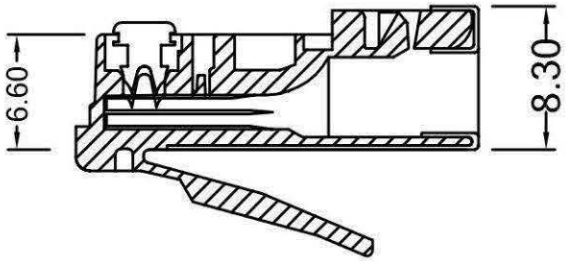

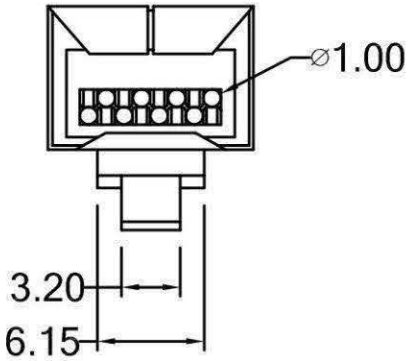

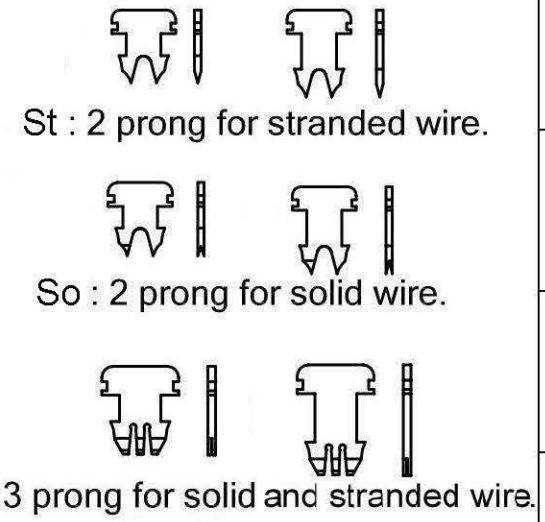

MATERIAL & FINISH

Body: Polycarbonate, UL94V-2, clean

Terminal: 0.35 mm thickness copper alloy, underplated with 100 uin Nickel, and plated with selective Gold in contact region and gold flash on remainder of terminal.

SPECIFICATION:

- Voltage : 125 VAC
- Current : 1.5 A
- Contact Resistance : 30 milliohms max.
- Insulation Resistance : 500 megaohms min.
- Dielectric Withstanding Voltage : 1000 VAC

RoHS Compliant

T&T Connection System Co., Ltd.

APPD. 核准		TOLERANCE 容許公差 .0 ± 0.1 .00 ± ANG. ±	PART NAME 品名 8P8C MODULAR JACK SHIELDED FOR CAT6 CABLE
DWG. 製圖 HELEN	SCALE 比例 參考		
DATE 制表日 2011/9/9	UNIT 單位 MM	SIZE. 紙張尺寸 A4	PART NO. 料號 RJ45-8P8C-CAT6-xxSH
	PAGE 張數 1 OF 1	REV. 版次 A	