嘉尼企業股份有限公司 CANAL ELECTRONIC CO.,LTD.

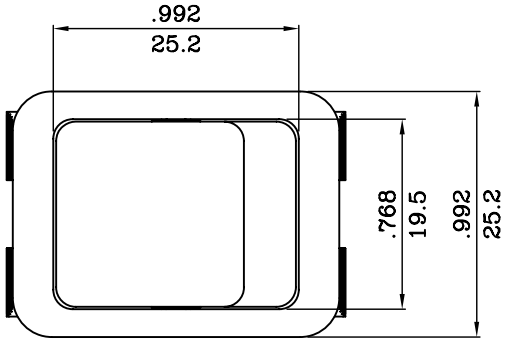

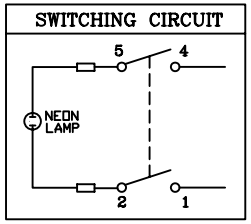

ROCKER SWITCH MODEL: R SERIES

RATING:(1) 16A 125VAC 1/4HP(UL/CSA)
(2) 16A 250VAC 1/4HP (UL/CSA)
(3) 20A 125VAC 3/4HP 250VAC (UL)
(4) 16(4)A 250V~T125 (1E4) (VDE/SEMKO/DEMKO
(5) 10(2)A 250V~T125 (5E4) NEMKO/FIMKO/SEV/CQC)
(6) 16(8)A 250V~T125(VDE/ENEC)

DIELECTRIC WITHSTAND VOLTAGE: 1000VAC 1 MIN

INSULATION RESISTANCE:100MΩ (MIN)

CONTACT RESISTANCE:20mΩ (MAX.)

ILLUMINATED:200~250VAC

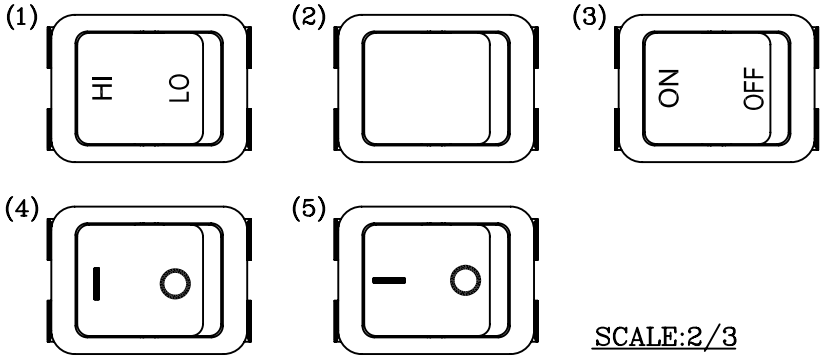

SCALE:2/3

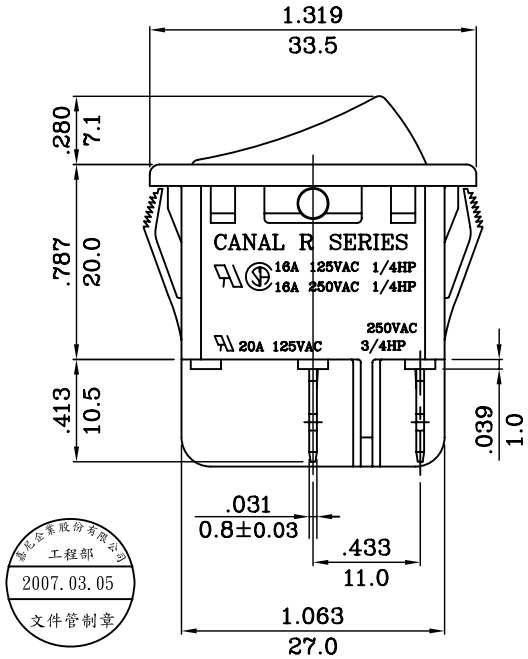

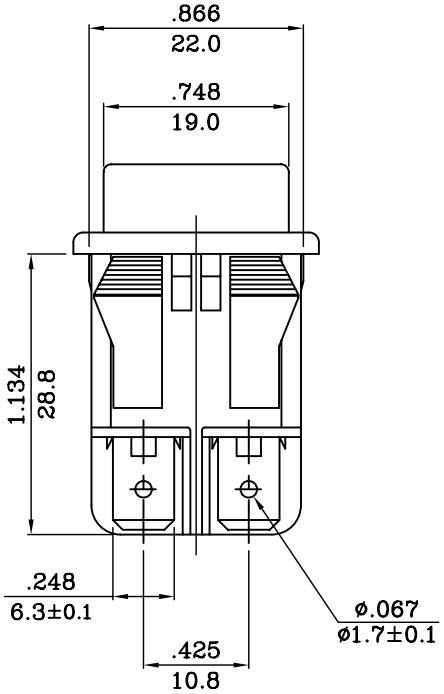

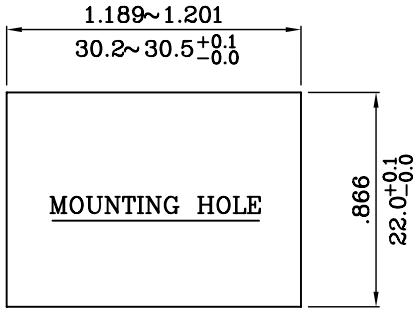

NOTE: 1. TOLERANCES UNLESS OTHERWISE SPECIFIED:$\pm\frac{.012}{0.3}$(in/mm)
2. IT IS IN COMPLIANCE WITH CANAL ROHS SPECIFICATION:WI-QA-24

REVISION	DESCRIPION	REVISED BY	TOLEANCES .X .XX ANGLE ½°					UNIT mm	PART NAME	R SPEC DRAWING	DWG NO
4			DRAWN BY	楊紹才	DESIGNED BY	楊紹才	SCALE	5:4			S1729A
3											
2			CHECKED BY		APPROVED BY		DATE	2007.01.29	PART NO	R210-1-C*G-**9	
1 2007.01.29	新增規格，首次出圖	楊紹才									