1 Electrical specifications	
1.1 Total Resistance	1KΩ~500KΩ ±20%
1.2 Resistance taper	A、B
1.3 Voltage proof	1 Minute At 500V AC
1.4 Rotational noise	Less than 100mV
1.5 Tracking error	0~－40dB ±3dB
1.6 Rated wattage	Curve B:0.125W Other than B：0.063W
1.7 Max operating voltage	Curve B:200V AC Other curve B：150V AC
1.8 Residual resistance	R1,2＜5Ω; R2,3＜10Ω
1.9 Insulation resistance	≥100MΩ at DC500V
1.10Operating Temperature	-10～60℃
2 Mechanical specifications	
2.1 Drawing	See the attachment
2.2 Total rotation angle	300±5°
2.3 Rotation Torque	2~20mN.m（20~200gf.cm）
2.4 Shaft stop strength	＞6Kgf.cm
2.5 Push pull strength	60N
2.6 Switch Rotational Angle	/
2.7 Switch Contant Resistance	/
2.8 Rotary life	10,000cycle

SRPASSIVES

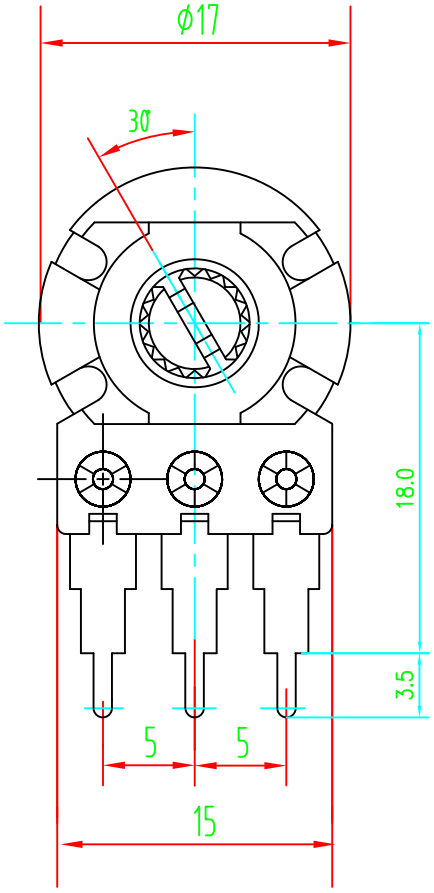

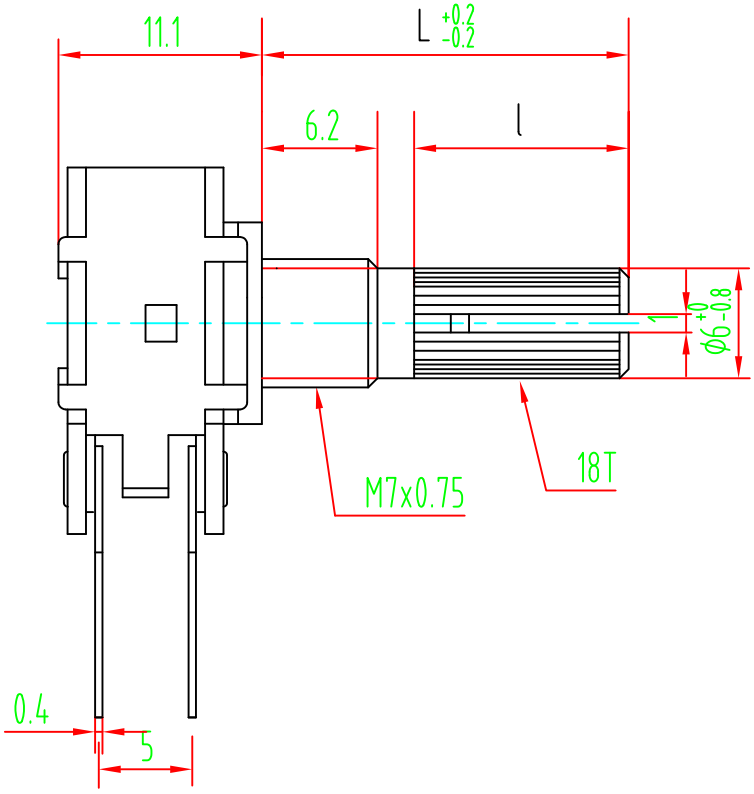

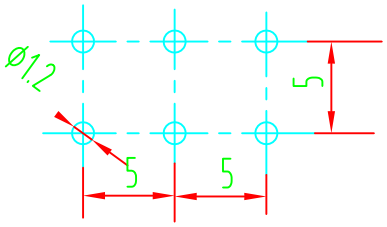

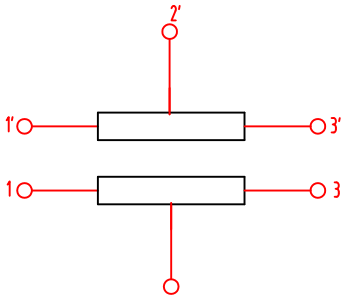

L	12	15 ✓	18	20
l	4.5	7 ✓	12	12

2				5			
1				4			
	DATE	REVISION	APPROVED	3			

			MODER: DRAWING NO:
DWN	DHKD	APPD	

Resistance taper 電阻規律曲綫類型

Pattern of resistance curve

TAPERS (A) SERIES

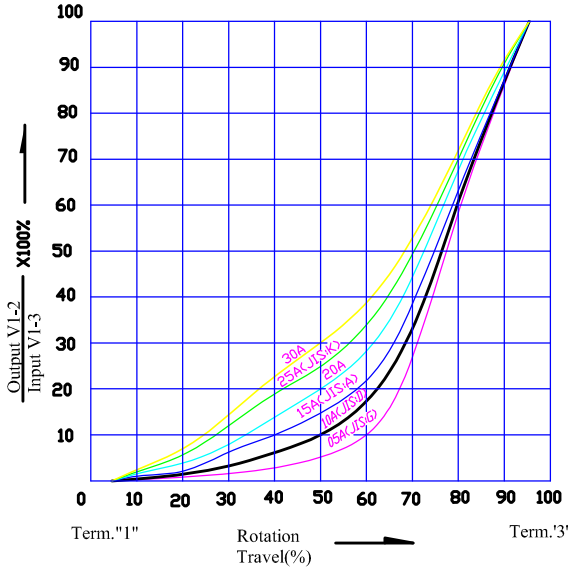

TAPERS (A) WITH 50% TAP

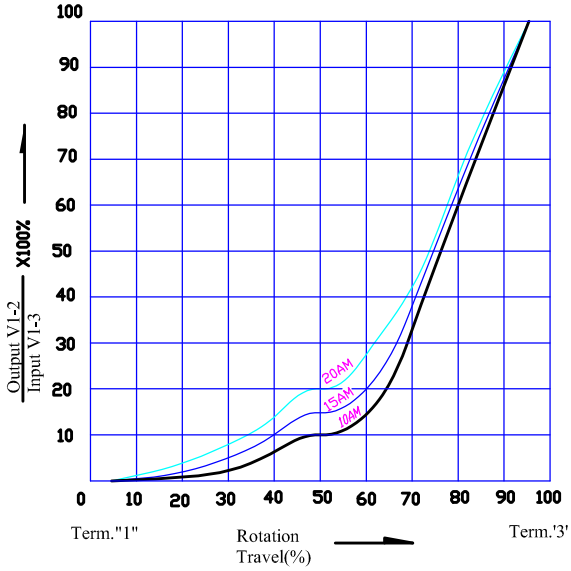

TAPERS (B) SERIES

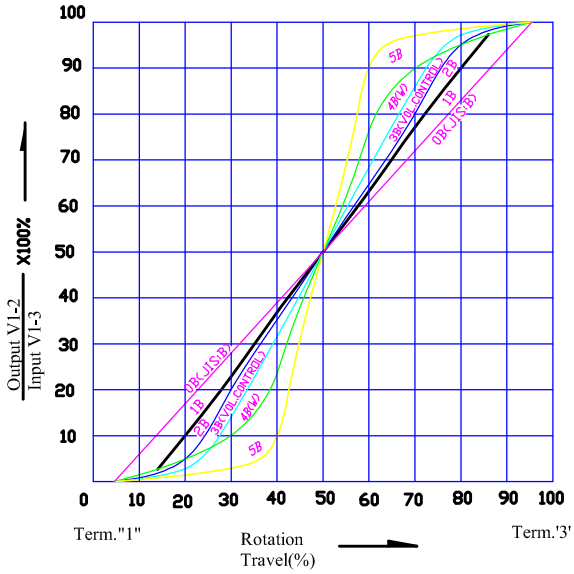

TAPERS (B) WITH 50% TAP

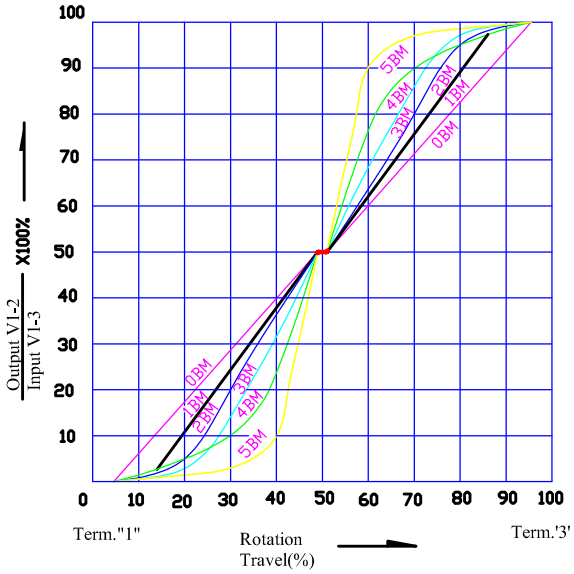

TAPERS (C) SERIES

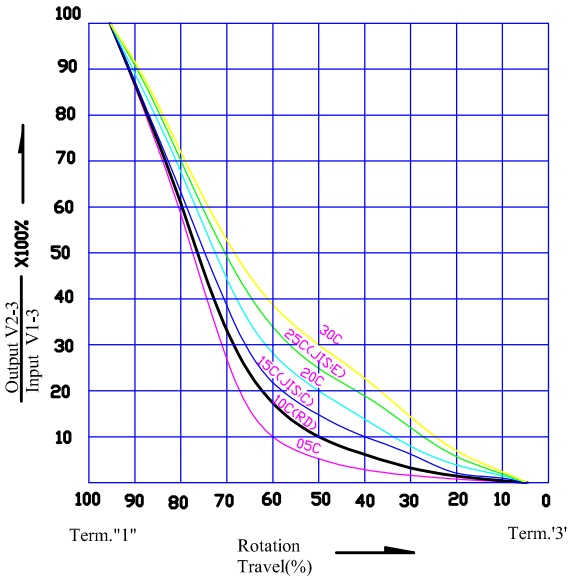
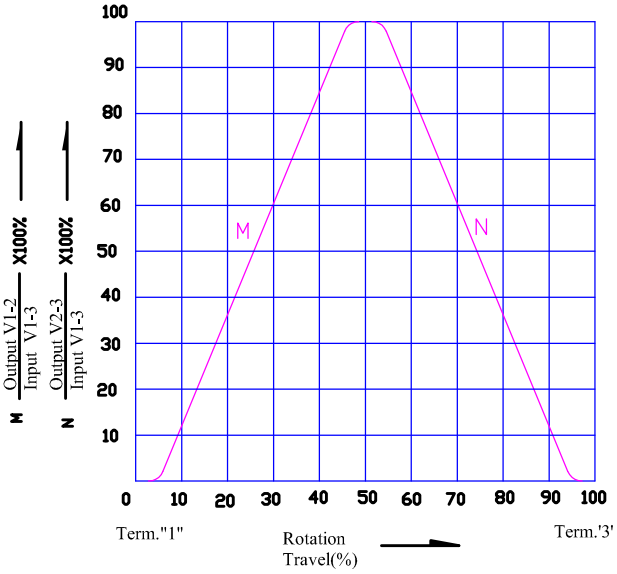
TAPERS (M) & (N)