Rating	10A 250VAC,15A 125VAC	Mounting Hole	Circuit Diagram
Contact R	50m ohm Max.	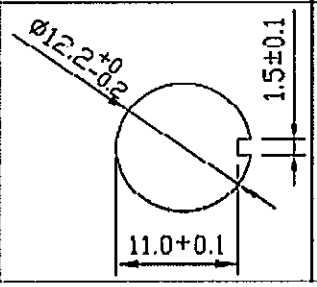	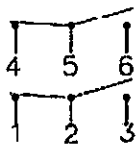
Insulation R	DC 500V 100M ohm Min.		
Dielectric Strength	AC 1500V 1 minute		
Circuit	6P DPDT ON-ON		

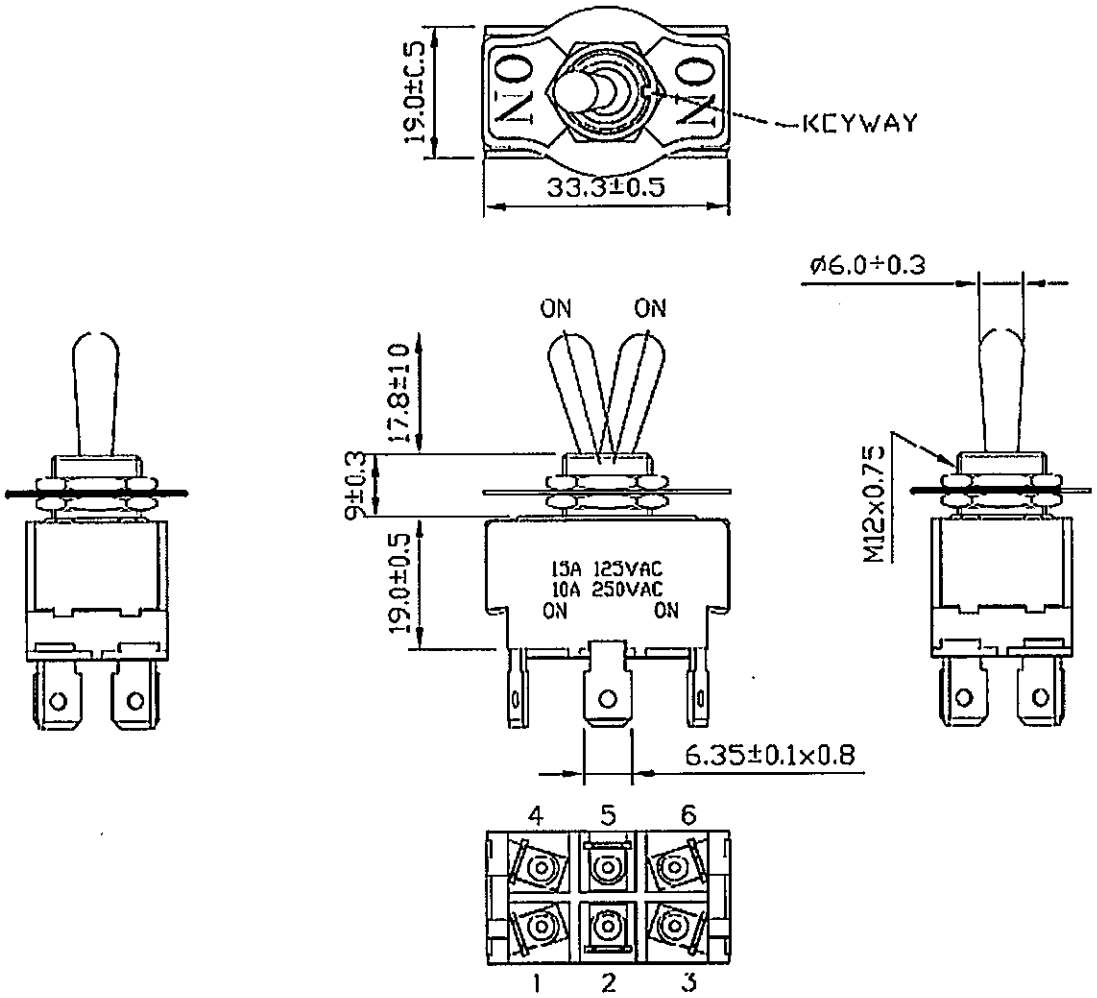

C8\ \R13-28B(1811447)

						△
						△
Date	Name	Descriptions				NO
Drawing	Check	Approval	SCI No.	1811447	Model Name	TOGGLE SWITCH
汪 大 旺	李 元 生	李 景 煒	Customer No.		Model No.	R13-28B-01
02/21/'05	02/22/'05	02/22/'05	Unit	mm	SHIN CHIN INDUSTRIAL CO., LTD.	