Rating	16A 125VAC, 10A 250VAC 10A 125VAC, 6A 250VAC CQC 10(4)A 250V~
Contact Resistance	50m ohm Max.
Insulation Resistance	DC 500V 100M ohm Min.
Dielectric Strength	AC 1500V 1 minute
Operation Temperature	-25°C~85°C
Switch Function	2P SPST (ON)-OFF

Mounting Hole

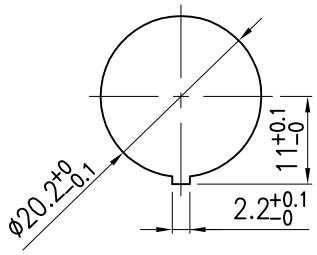

Thickness:2.0~3.0

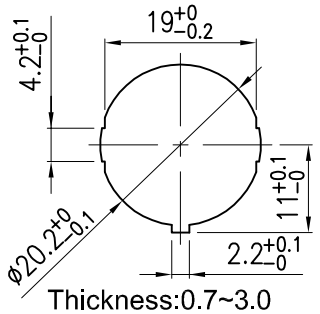

Thickness:0.7~3.0

Circuit Diagram

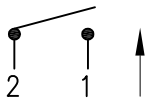

Material:
Frame: Nylon 66, Black
Actuator: Nylon 66, Black
Terminals: Copper Alloy

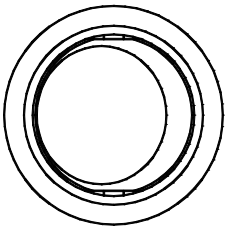

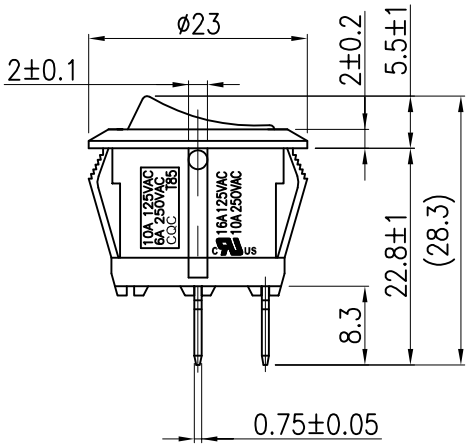

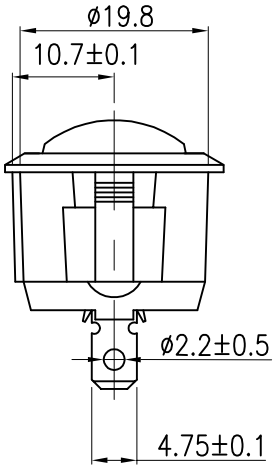

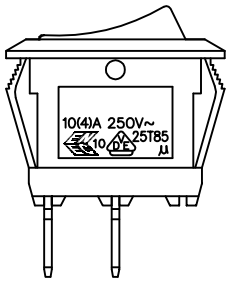

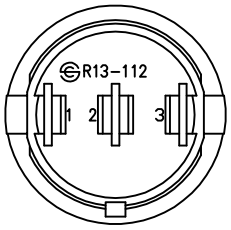

1、Tolerances Unless Otherwise Specified ±0.3

								△
								△
Date	Name	Description						No.
Drawn	Checked	Approved	SCI BOM No.	1821656		Model Name	ROCKER SWITCH	
邱 權	楊金江	李元生	Customer No.			Model No.	R13-112F-02	Rev. 0
03/29/'11	03/21/'11	03/23/'11	Unit	mm	Shin Chin Industrial Co., Ltd.			