EDITION	DATE	REVISION RECORD	REVISION NO.	APPROVED

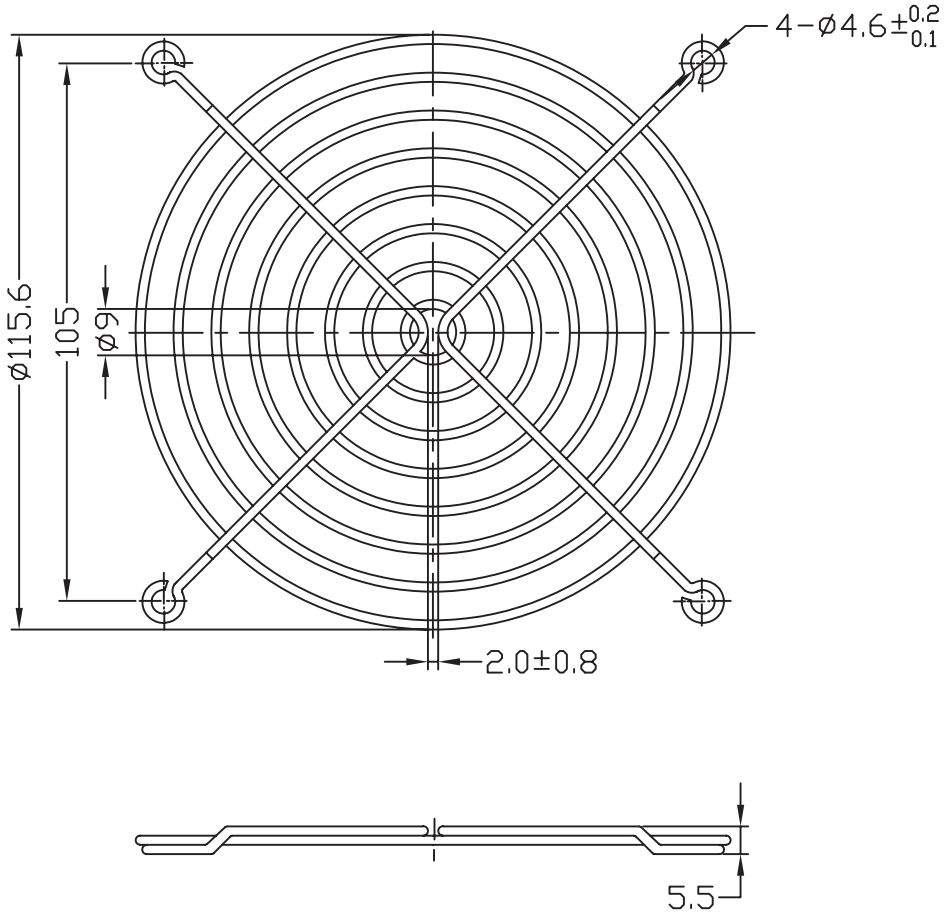

NOTES:
1.MATERIAL:C1008 BRIGHT BASIC WIRE.
2.FINISH:BRIGHT NICKEL CHROME.$Cr3^{+}$
3.(1)RINGS ARE Ø1.8mm.
(2)RIBS ARE Ø1.8mm.
4.WELD JOINTS TO WITHSTAND 88 LBS PULL FORCE.
5.SPACING BETWEEN RINGS TO BE EUQIDISTANT 5.56mm.
6.GENERAL TOLERANCE UNLESS NOTED:±0.5mm.
7.PART MEETS Ø6.35mmPLUG GAUGE TEST.
8.UNIT:mm.

APPROVED	CHECKED	DESIGNED	DRAWN		MATERIAL	SEE NOTES	TITLE	FAN GUARD	
				SCALE 1/1.5	FINISH	SEE NOTES	PART NO.		0 REV
				DRAWING DATE					