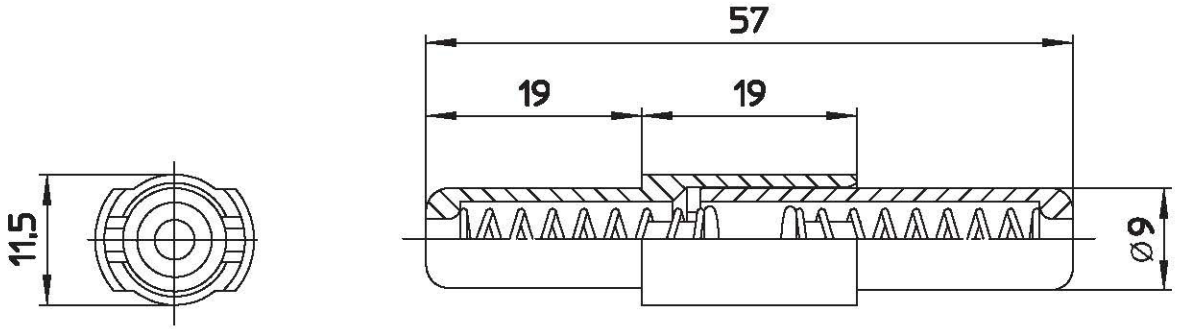

TECHNICAL CHARACTERISTICS

MATERIAL
INSULATOR: PA66
FLAMMABILITY RATING: UL94V0
COLOR: BLACK
CONTACT / PLATING: CuZn 37 + Ni
SPRING: INOX STEEL

ENVIRONMENTAL
OPERATING TEMPERATURE: -30°C UP TO +85°C
COMPLIANCE: LEAD FREE AND ROHS

ELECTRICAL

CURRENT RATING:	6,3A
WORKING VOLTAGE:	250VAC
WITHSTANDING VOLTAGE:	1,5KV
RATED POWER ACCEPTANCE:	1,6W

PROTECTION CLASS: I o II
CONTACT RESISTANCE: 0,5 mΩ MAX

MECHANICAL
FUSE-LINK: 5x20 mm and 6,3x32 mm
PROTECTION RATE: IP00
SHOCKSAFE CATEGORY: PC1

PACKAGING
BOX

RoHS Compliant

REV	DATE	FILE	BY
G			
F			
E			
D			
C			
B	15-OCT-18	INSULATOR	AK
A	21-DEC-15	PDF	AK

PROJECTION:

GENERAL TOLERANCE
±0,1

APPROVAL: FBr

UNIT: MM
SCALE:
SHEET: 1/2
DRAW: AK

SIZE
A4