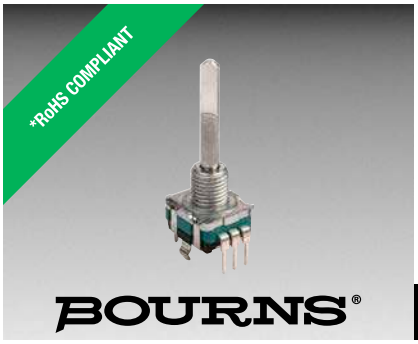

Features

- Flatted metal shaft option
- Horizontal & vertical mount option
- Audio & linear tapers
- PC pin layout for board mount
- RoHS compliant*

PRS11R - 11 mm Rotary Metal Shaft Potentiometer

Electrical Characteristics

Taper..... Audio, Linear
Standard Resistance ... 5k ohms to 250k ohms
Standard Resistance Tolerance
R < 250k ohms ..... ±20 %
R = 250k ohms ..... ±30 %
Residual Resistance..... 0.4 % max.
Insulation Resistance
.....100 megohms minimum @ 250V DC
Dielectric Withstanding Voltage
Sea Level..... 300 V AC min.
Power Rating.....0.05 W
Maximum Operating Voltage
.....50V AC / 30V DC
Sliding Noise..... 100 mV max.

Environmental Characteristics

Operating Temperature Range
.....-20 °C to +70 °C (-4 °F to +158 °F)
Storage Temperature Range
..... -40 °C to +70 °C (-40 °F to +158 °F)
Soldering Condition
Wave Soldering ..... 260 °C for 3 s
Manual Soldering..... 350 °C for 3 s
IP Rating..... IP 44

Mechanical Characteristics

Mechanical Angle .....300 ° ± 10 ° max.
Torque
Running ..... 20-250 gf-cm
(Starting torque ignored)
Mounting.....3 kgf-cm max.
Stop Strength.....3 kgf-cm min.
Rotational Life.....15,000 cycles min.
Switch Life .....20,000 cycles min.
Hardware.....One flat washer and one hex nut supplied with threaded bushing versions

Switch Characteristics

Switch Type .....Push ON Momentary SPST
Power Rating (Resistive Load)
.....10 mA at 5 V DC
Switch Travel ..... 0.5 ± 0.4 mm
Switch Actuation Force..... 600 ± 300 gf
Contact Resistance .....100 mΩ max.

Derating Curve

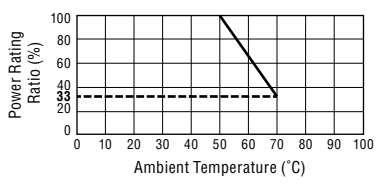

Tapers

A Series

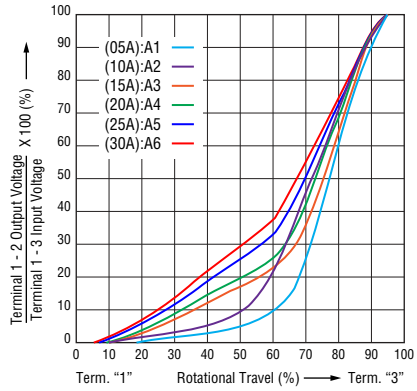

B Series

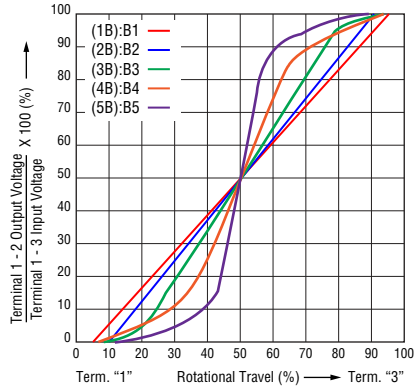

C Series

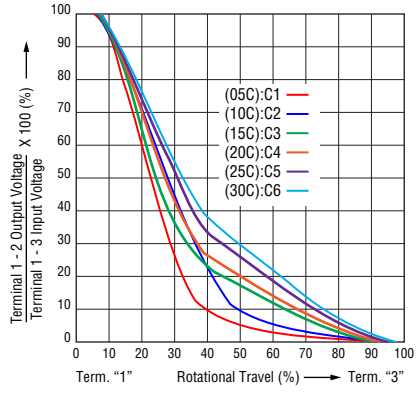

Additional Information

Click these links for more information:

Tapers

Resistance (Ohms)	Resistance Code
5,000	502
10,000	103
20,000	203
50,000	503
100,000	104
250,000	254

Circuit

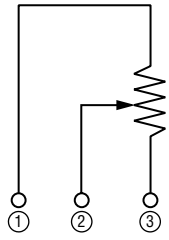

Switch Circuit

WARNING
Cancer and Reproductive Harm
www.P65Warnings.ca.gov

*RoHS Directive 2015/863, Mar 31, 2015 and Annex.
Specifications are subject to change without notice. Users should verify actual device performance in their specific applications. The products described herein and this document are subject to specific legal disclaimers as set forth on the last page of this document, and at www.bourns.com/docs/legal/disclaimer.pdf.

Product Dimensions

PRS11R-2xxF-Nxxxxx

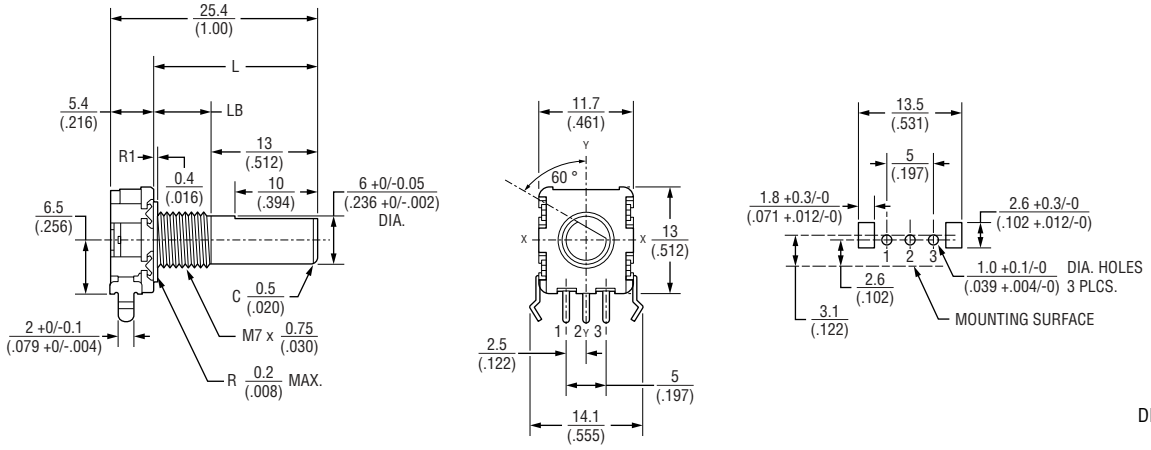

DIMENSIONS: MM (INCHES)

PRS11R-2xxF-Sxxxxx

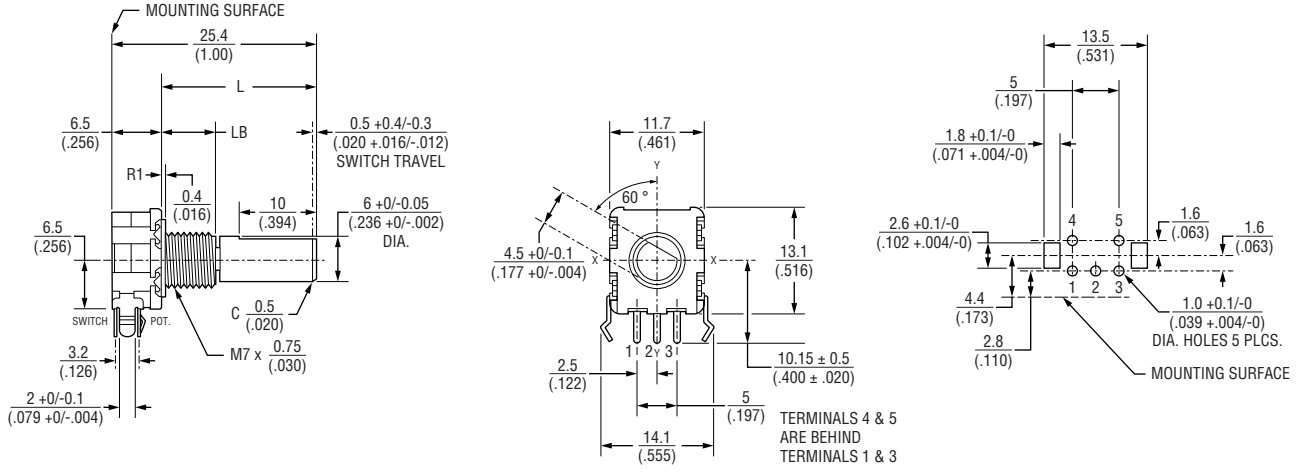

Shaft and Bushing Dimensions

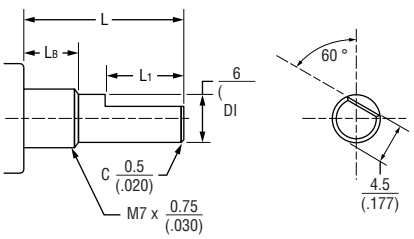

SHAFT SHOWN IN FULL C.C.W. POSITION

L	LB	L1
15 (.591)	7 (.276)	5 (.197)
20 (.787)	7 (.276)	10 (.394)
25 (.984)	7 (.276)	10 (.394)

DIMENSIONS: MM (INCHES)

Hardware

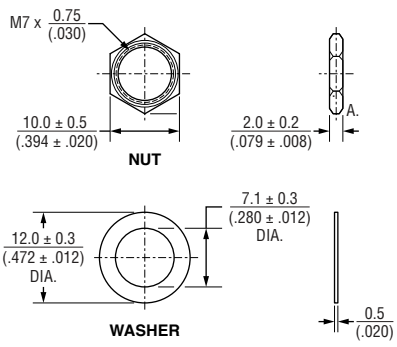

Specifications are subject to change without notice.
Users should verify actual device performance in their specific applications.
The products described herein and this document are subject to specific legal disclaimers as set forth on the last page of this document, and at www.bourns.com/docs/legal/disclaimer.pdf.

Product Dimensions

PRS11R-4xxF-Nxxxxx

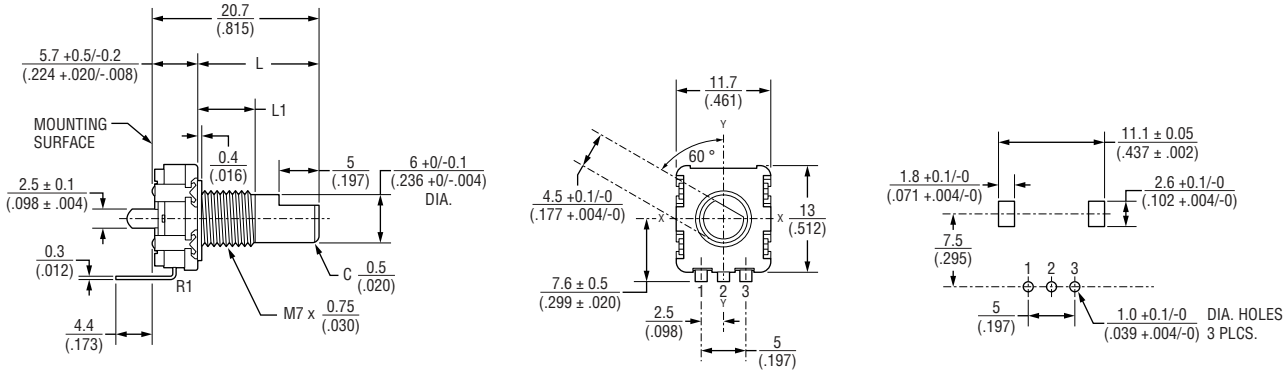

PRS11R-4xxF-Sxxxxx

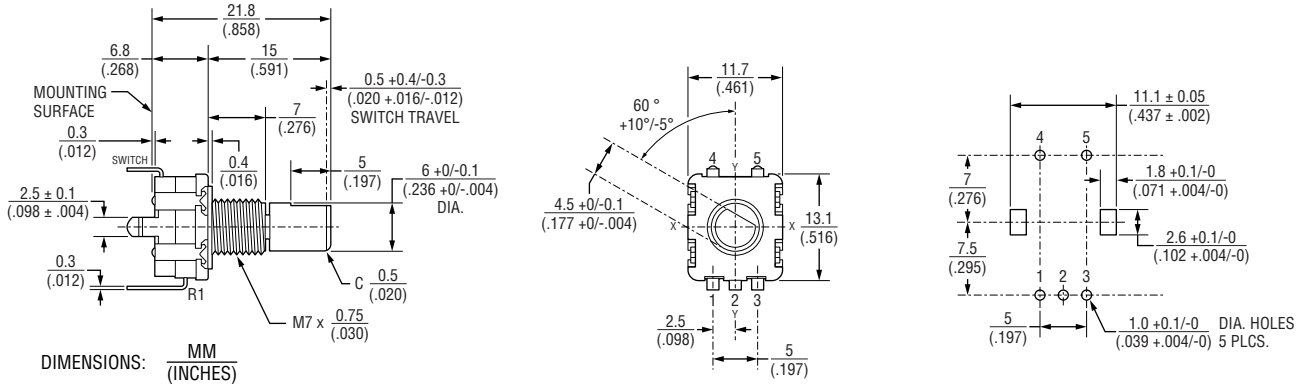

How To Order

PRS11R - 4 15 F - S103 B1

Model

Orientation
- 2 = PC Pins - vertical / side facing
- 4 = PC Pins - horizontal / rear facing

Shaft Length
- 15 = 15 mm 20 = 20 mm 25 = 25 mm

Shaft Style
- F = Flatted

Switch Configuration
- N = No Switch S = Push Momentary Switch

Resistance Code (see table)

Resistance Taper (see Taper charts)

Asia-Pacific:
Tel: +886-2 2562-4117
Email: asiacus@bourns.com

Europe:
Tel: +36 88 885 877
Email: eurocus@bourns.com

The Americas:
Tel: +1-951 781-5500
Email: americus@bourns.com

www.bourns.com

03/21

Specifications are subject to change without notice.
Users should verify actual device performance in their specific applications.
The products described herein and this document are subject to specific legal disclaimers as set forth on the last page of this document, and at www.bourns.com/docs/legal/disclaimer.pdf.

Legal Disclaimer Notice

BOURNS®

This legal disclaimer applies to purchasers and users of Bourns® products manufactured by or on behalf of Bourns, Inc. and its affiliates (collectively, "Bourns").

Unless otherwise expressly indicated in writing, Bourns® products and data sheets relating thereto are subject to change without notice. Users should check for and obtain the latest relevant information and verify that such information is current and complete before placing orders for Bourns® products.

The characteristics and parameters of a Bourns® product set forth in its data sheet are based on laboratory conditions, and statements regarding the suitability of products for certain types of applications are based on Bourns' knowledge of typical requirements in generic applications. The characteristics and parameters of a Bourns® product in a user application may vary from the data sheet characteristics and parameters due to (i) the combination of the Bourns® product with other components in the user's application, or (ii) the environment of the user application itself. The characteristics and parameters of a Bourns® product also can and do vary in different applications and actual performance may vary over time. Users should always verify the actual performance of the Bourns® product in their specific devices and applications, and make their own independent judgments regarding the amount of additional test margin to design into their device or application to compensate for differences between laboratory and real world conditions.

Unless Bourns has explicitly designated an individual Bourns® product as meeting the requirements of a particular industry standard (e.g., ISO/TS 16949) or a particular qualification (e.g., UL listed or recognized), Bourns is not responsible for any failure of an individual Bourns® product to meet the requirements of such industry standard or particular qualification. Users of Bourns® products are responsible for ensuring compliance with safety-related requirements and standards applicable to their devices or applications.

Bourns® products are not recommended, authorized or intended for use in nuclear, lifesaving, life-critical or life-sustaining applications, nor in any other applications where failure or malfunction may result in personal injury, death, or severe property or environmental damage. Unless expressly and specifically approved in writing by two authorized Bourns representatives on a case-by-case basis, use of any Bourns® products in such unauthorized applications might not be safe and thus is at the user's sole risk. Life-critical applications include devices identified by the U.S. Food and Drug Administration as Class III devices and generally equivalent classifications outside of the United States.

Bourns expressly identifies those Bourns® standard products that are suitable for use in automotive applications on such products' data sheets in the section entitled "Applications." Unless expressly and specifically approved in writing by two authorized Bourns representatives on a case-by-case basis, use of any other Bourns® standard products in an automotive application might not be safe and thus is not recommended, authorized or intended and is at the user's sole risk. If Bourns expressly identifies a sub-category of automotive application in the data sheet for its standard products (such as infotainment or lighting), such identification means that Bourns has reviewed its standard product and has determined that if such Bourns® standard product is considered for potential use in automotive applications, it should only be used in such sub-category of automotive applications. Any reference to Bourns® standard product in the data sheet as compliant with the AEC-Q standard or "automotive grade" does not by itself mean that Bourns has approved such product for use in an automotive application.

Bourns® standard products are not tested to comply with United States Federal Aviation Administration standards generally or any other generally equivalent governmental organization standard applicable to products designed or manufactured for use in aircraft or space applications. Bourns expressly identifies Bourns® standard products that are suitable for use in aircraft or space applications on such products' data sheets in the section entitled "Applications." Unless expressly and specifically approved in writing by two authorized Bourns representatives on a case-by-case basis, use of any other Bourns® standard product in an aircraft or space application might not be safe and thus is not recommended, authorized or intended and is at the user's sole risk.

The use and level of testing applicable to Bourns® custom products shall be negotiated on a case-by-case basis by Bourns and the user for which such Bourns® custom products are specially designed. Absent a written agreement between Bourns and the user regarding the use and level of such testing, the above provisions applicable to Bourns® standard products shall also apply to such Bourns® custom products.

Users shall not sell, transfer, export or re-export any Bourns® products or technology for use in activities which involve the design, development, production, use or stockpiling of nuclear, chemical or biological weapons or missiles, nor shall they use Bourns® products or technology in any facility which engages in activities relating to such devices. The foregoing restrictions apply to all uses and applications that violate national or international prohibitions, including embargos or international regulations. Further, Bourns® products and Bourns technology and technical data may not under any circumstance be exported or re-exported to countries subject to international sanctions or embargoes. Bourns® products may not, without prior authorization from Bourns and/or the U.S. Government, be resold, transferred, or re-exported to any party not eligible to receive U.S. commodities, software, and technical data.

To the maximum extent permitted by applicable law, Bourns disclaims (i) any and all liability for special, punitive, consequential, incidental or indirect damages or lost revenues or lost profits, and (ii) any and all implied warranties, including implied warranties of fitness for particular purpose, non-infringement and merchantability.

For your convenience, copies of this Legal Disclaimer Notice with German, Spanish, Japanese, Traditional Chinese and Simplified Chinese bilingual versions are available at:

Web Page: http://www.bourns.com/legal/disclaimers-terms-and-policies

PDF: http://www.bourns.com/docs/Legal/disclaimer.pdf