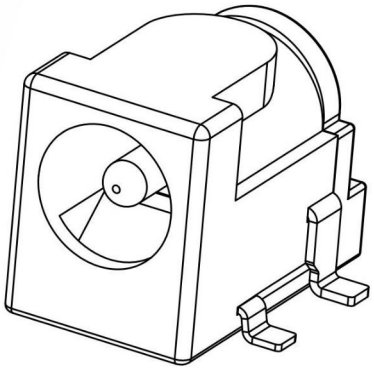

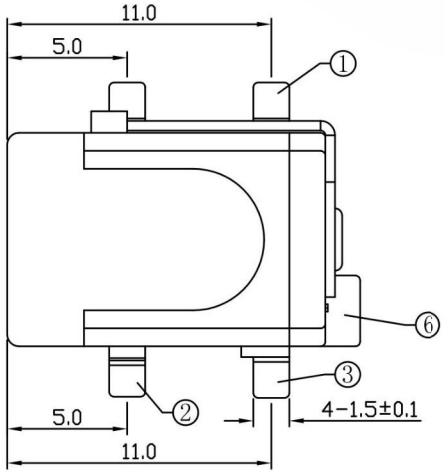

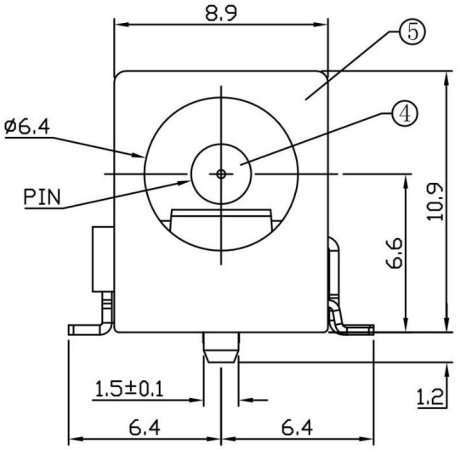

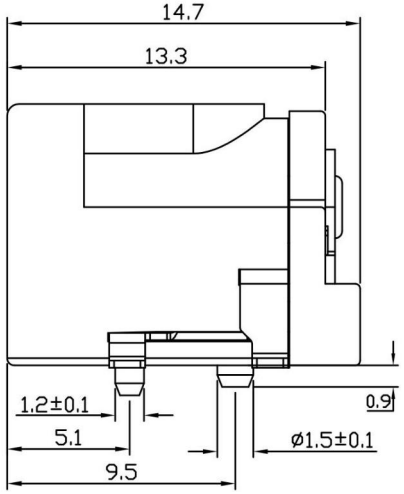

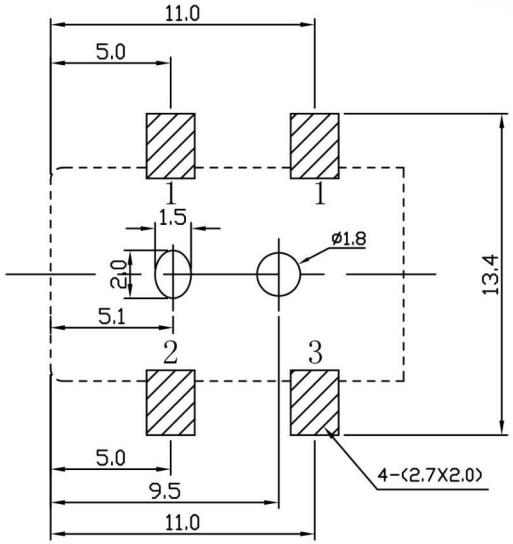

T:1.6 Dimensions of PC board holes

Tolerance : ±0.1(Printed-top view)

LTR	PART NAME	QTY	MATERIAL	REMARK
6	COVER	1	PA9T	UL-94V0(BLACK)
5	HOUSING	1	PA9T	UL-94V0(BLACK)
4	PIN	1	H59(COPPER ALLOY)	MB:Cu Cn/Sn PLATED
3	CURVE PIECE	1	C2680 t=0.40	MB:Cu Sn PLATED
2	SPRING	1	C5191 t=0.30	MB:Cu Sn PLATED
1	CURVE PIECE	1	C2680 t=0.40	MB:Cu Sn PLATED

SCHEMATIC		
C8118-CCTB0000R	ø2.0	1
C8118-DCTB0000R	ø2.5	3 2

UNLESS OTHERWISE SPECIFIED, TOLERANCE ON DECIMAL:±0.2

RoHS Compliant

玄茂科技股份有限公司

APPD. 核准 BETTY		TOLERANCE 容許公差 .0 ± .00 ± ANG. ±	PART NAME 品名 DC POWER JACK SMT TYPE Φ2.0mm or Φ2.5mm NORMAL CLOSE TIN PLATING BLACK INSULATOR REEL PACKING ROHS
DWG. 製圖 BETTY	SCALE 比例 參考		
	UNIT 單位 MM	SIZE. 紙張尺寸 A4	PART NO. 料號
DATE 制表日 2010/01/07	PAGE 張數 1 OF 1	REV. 版次 B	