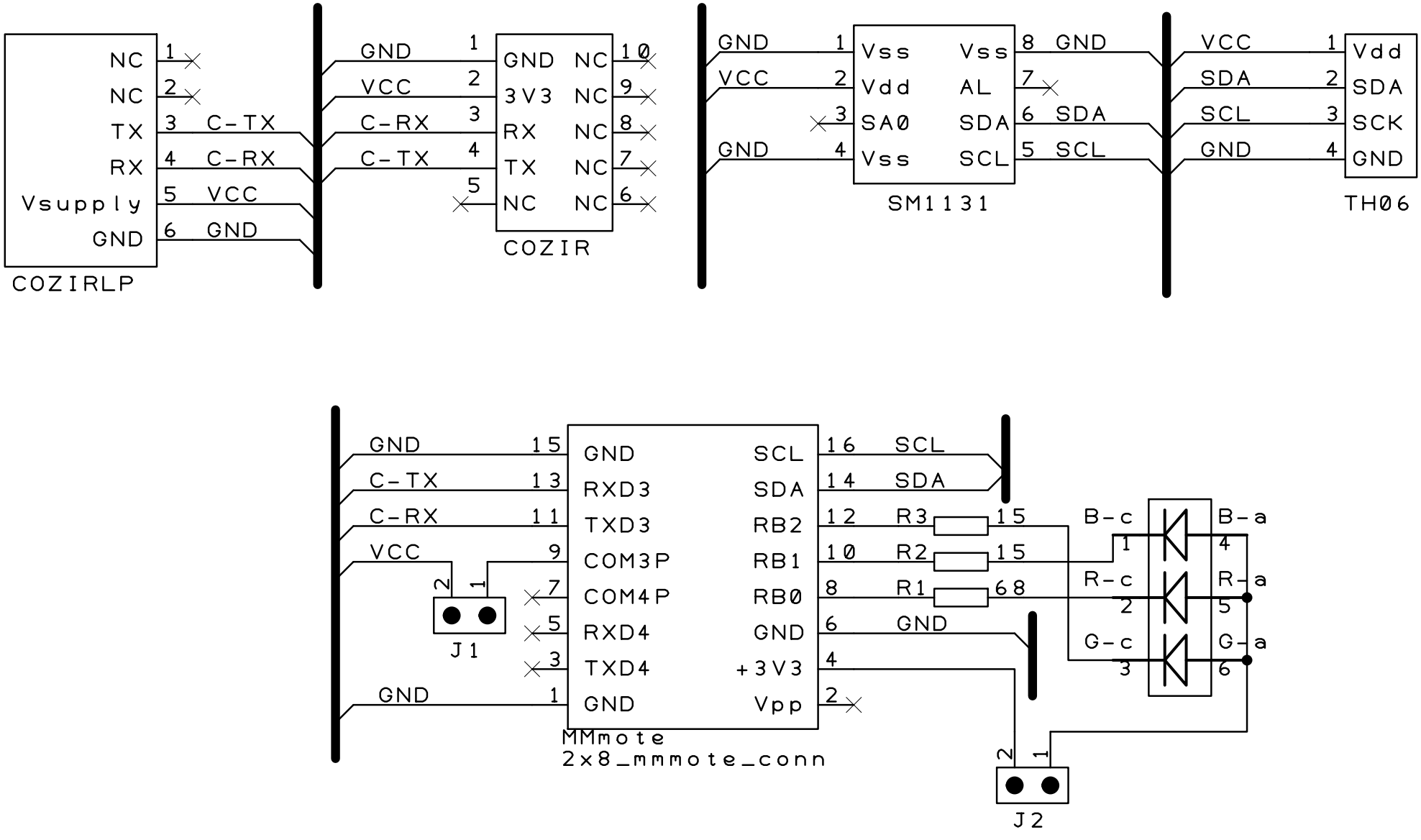
COZIRLP
NC 1
NC 2
TX 3 C-TX
RX 4 C-RX
Vsupply 5 VCC
GND 6 GND
GND 1
VCC 2
C-RX 3
C-TX 4
5
COZIR
GND NC 10
3V3 NC 9
RX NC 8
TX NC 7
NC NC 6
SM1131
GND 1 Vss
VCC 2 Vdd
3 SA0
GND 4 Vss
Vss 8 GND
AL 7
SDA 6 SDA
SCL 5 SCL
TH06
VCC 1 Vdd
SDA 2 SDA
SCL 3 SCK
GND 4 GND
MMmote
2x8_mmmote_conn
GND 15
C-TX 13
C-RX 11
VCC 9
7
5
3
GND 1
GND
RXD3
TXD3
COM3P
COM4P
RXD4
TXD4
GND
SCL 16 SCL
SDA 14 SDA
RB2 12 R3 15
RB1 10 R2 15
RB0 8 R1 68
GND 6 GND
+3V3 4
Vpp 2
J1
J2
B-c 1
R-c 2
G-c 3
B-a 4
R-a 5
G-a 6