FILE: D02\TL02\FH\FH-278C-A-XXX

| REV | E.C.N NO. | CONTENT | CHK | DATE |
|---|---|---|---|---|
| V1.0 | S1709019 | 增加加纤材料，结案发行 | YHZ | 18.01.08 |

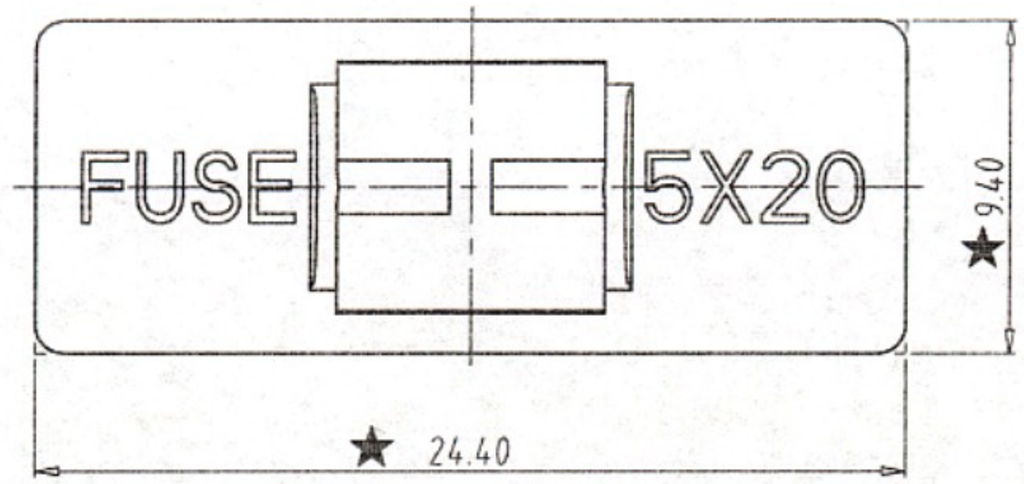


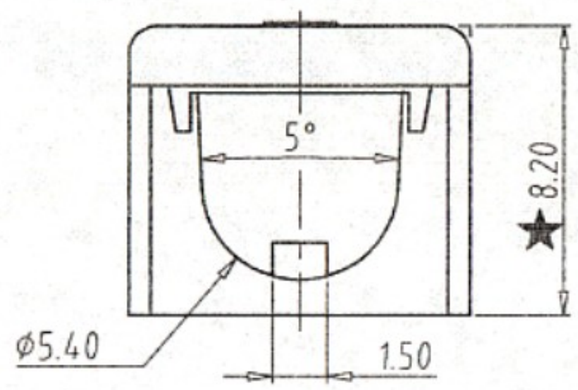


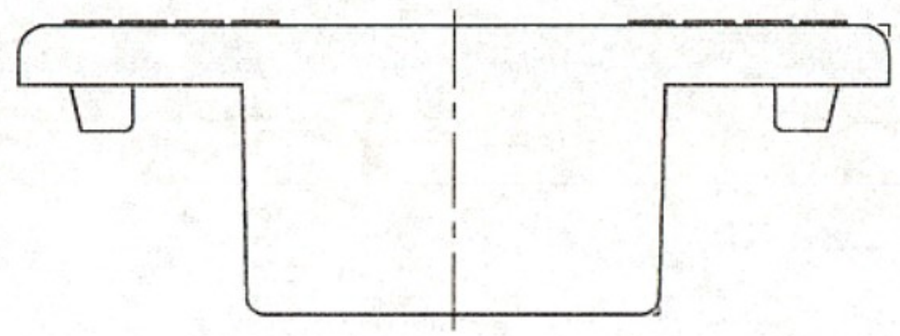

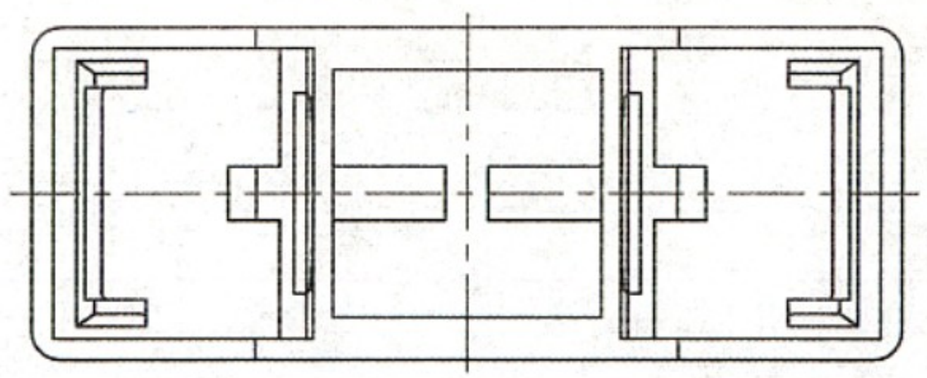

NOTES:

1. Mountings Ø5.0*20 Fuse
2. " ★ " the important dimension.
3. RoHS Compliance.
4. 边盖为成品单独出货

| Total Pitch Tolerances in mm | | | | | | | | | Nominal dimension range in mm | | | | | | | | | ⊥ | | ⌯ | — | | // |
|---|---|---|---|---|---|---|---|---|---|---|---|---|---|---|---|---|---|---|---|---|---|---|---|
| over 0 to 30 | over 30 to 53 | over 53 to 70 | over 70 to 90 | over 90 to 115 | over 115 to 150 | over 150 to 200 | over 200 to 250 | over 250 to 320 | over 0 to 30 | over 30 to 53 | over 53 to 70 | over 70 to 90 | over 90 to 115 | over 115 to 150 | over 150 to 200 | over 200 to 250 | over 250 to 320 | over 0 to 10 | over 10 | all | over 0 to 100 | over 100 to 150 | over 150 |
| ±0.18 | ±0.20 | ±0.25 | ±0.3 | ±0.35 | ±0.44 | ±0.55 | ±0.70 | ±0.75 | ±0.20 | ±0.25 | ±0.30 | ±0.35 | ±0.44 | ±0.55 | ±0.70 | ±0.80 | ±0.90 | 0.2 | 0.3 | 0.3 | 0.2 | 0.3 | 0.5 |

| | | | | | | | |
|---|---|---|---|---|---|---|---|
| 1 | HOUSING | | TL046A30XX | 1 | PA66G25 | | UL94V-0 |
| ITEM | NAME OF PART | | NO. OF PART | Q"TY | MATERIAL | | NOTE |
| DWG. | YHZ | DATE | 17.09.08 | UNITS | MM | SHEET/OF | 1/1 |
| CHK. | | DATE | | SCALE | 4:1 | A4 | |
| APP. | | DATE | 18.01.11 | NAME | FH-278C-A-XXX | | |
| TIANLI ELECTRICAL MACHINERY(NINGBO)CO.,LTD. | | | | DWGNO. | TL-02-FH-278C-A-XXX | | |