REV.	DESCRIPTION	DRAWN	CHECKED	APPROVED
A	NEW RELEASE	YCH 09/03/10'		

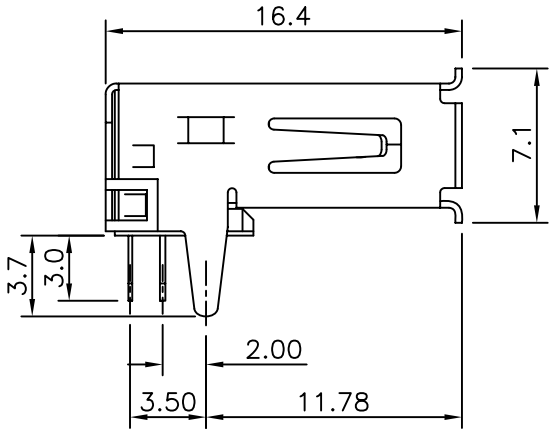

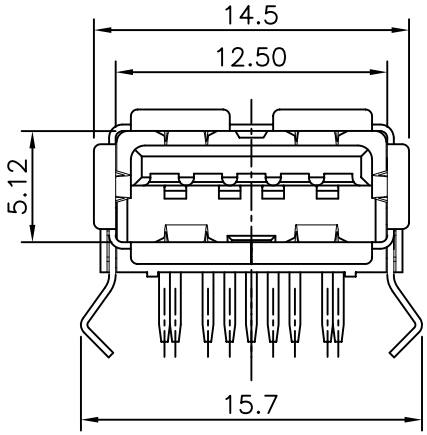

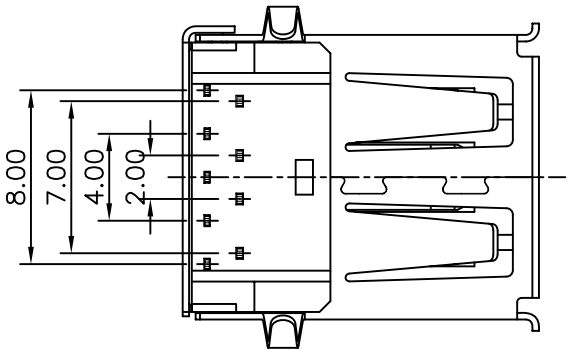

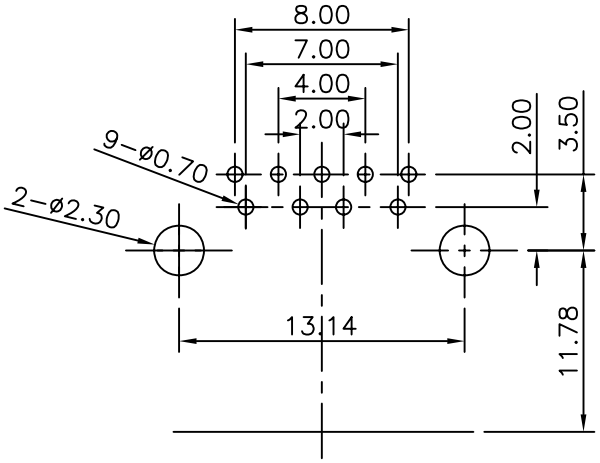

RECOMMEND PCB LAYOUT
(TOLERANCE=±0.05)

NOTES:

1. SPECIFICATIONS:
   - 1.0 CONTACT RESISTANCE: 30mΩ(max.) INITIAL FOR VBUS AND GND CONTACTS. 50mΩ(max.) INITIAL FOR ALL OTHER CONTACTS.
   - 1.1 INSULATOR RESISTANCE: 100MΩ min. AT 100V DC.
   - 1.2 CURRENT RATING: 1.8A FOR VBUS PIN AND ITS CORESPONDING GND PIN. 0.25A (MIN.) FOR ALL OTHER CONTACTS
   - 1.3 VOLTAGE RATING: 30V AC/DC.
   - 1.4 DIELECTRIC STRENGTH: AC 100V FOR 1 Minute.
   - 1.5 OPERATING TEMPERATURE: −55°C ~ +85°C.
2. MATERIALS:
   - 2.0 HOUSING: THERMOPLASTIC (UL 94−0).
   - 2.1 CONTACT: COPPER ALLOY
   - 2.2 SHELL: COPPER ALLOY.
3. PRODUCT NUMBER CODE:

DS1095−05−X X X X

- CONTACT PLATING
  - 0: Selective gold flash
  - 03: Selective gold 3u"
  - 30: Selective gold 30u"
- MOUNTING TYPE
  - R: R/A
- SHELL PLATING:
  - N: Nickel
  - 6: Tin
- COLOR OF HOUSING:
  - L: Blue
  - W: White
  - B: Black

GENERAL TOLERANCE		ANGLE TOLERANCE	
X.	±0.60	X.	±5°
.X	±0.38	.X	±3°
.XX	±0.25	.XX	±2°

DRAWING TYPE	CUSTOMER		
SCALE	1:1	SHEET	1 OF 1
DRAWING NO.	C−DS1095−05−XXRX		

PROJECTION		TITLE	USB 3.0 A TYPE FEMALE R/A TYPE
UNITS	mm		
SHEET SIZE	A4	SERIES	DS1095−05 SERIES

晨翔电子有限公司
CONNFLY ELECTRONIC CO. LTD