REV.	DESCRIPTION	DRAWN	CHECKED	APPROVED
A	NEW RELEASE	LJH11/16/05'		LJC11/16/05'
B	DRAWING UPDATE	JLZ 07/25/16'		

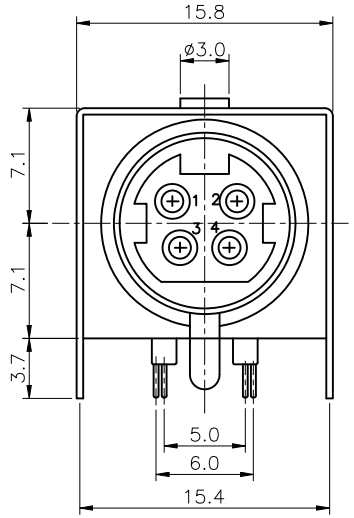

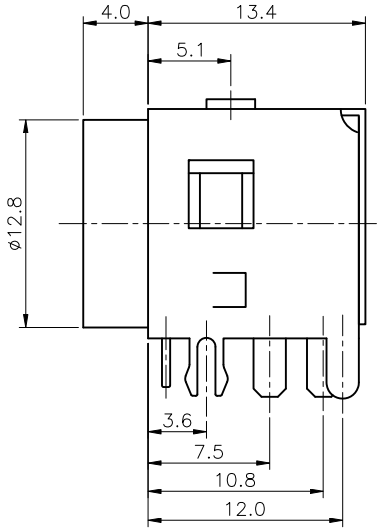

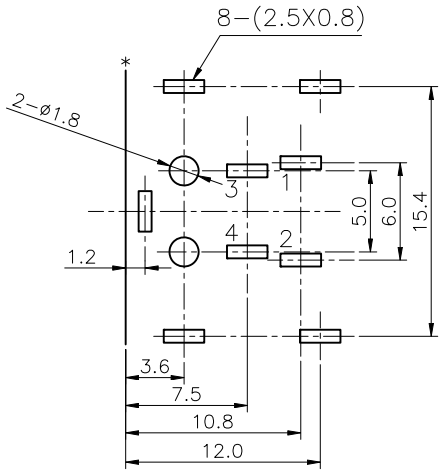

FOR 4PIN ONLY
RECOMMEND PCB LAYOUT
(TOLERANCE=±0.05)

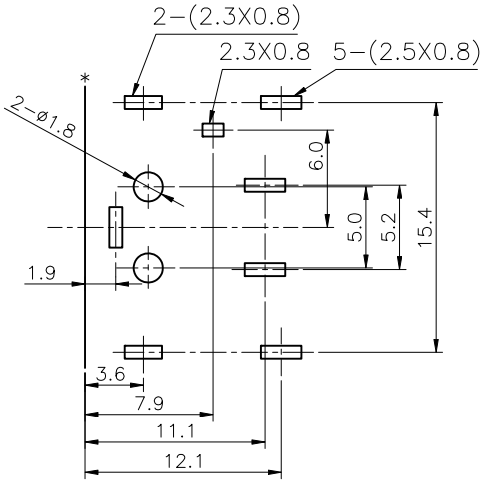

FOR 3PIN ONLY
RECOMMEND PCB LAYOUT
(TOLERANCE=±0.05)

NOTES:

1. SPECIFICATIONS:
   - 1.0 VOLTAGE RATING: 30V DC.
   - 1.1 CONTACT CURRENT RATING: 1A MAX. PER PIN.
   - 1.2 CONTACT RESISTANCE: 30 MILLIOHMS MAX.
   - 1.3 DIELECTRIC WITHSTANDING VOLTAGE: 500V AC(rms) FOR 1 MINUTE.
   - 1.4 INSULATION RESISTANCE: 1000 MEGAOHMS MIN.
   - 1.5 OPERATING TEMPERATURE: −40°C~+105°C.
2. PRODUCT NUMBER CODE:

DS1093−05 − X X X X X

- Shell support
  - X: W/O Shell
  - S: W/ Shell
- Contact plating
  - 6: Tin
- No.of contacts:
  - 4: 4 pin
  - 3: 3 pin
- Shell Plating:
  - N: Nickel
  - 6: Tin
- Color of housing
  - B: Black
- Series No.
  - DS1093−05

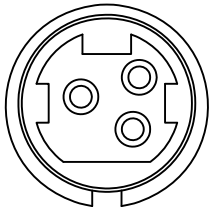

3 pin

GENERAL TOLERANCE	ANGLE TOLERANCE
X. ±0.60	X. ±5°
.X ±0.38	.X ±3°
.XX ±0.25	.XX ±2°

DRAWING TYPE	CUSTOMER		
SCALE	1:1	SHEET	1 OF 1
DRAWING NO.	C−DS1093−05−XXXXX−B		

PROJECTION		TITLE	MINI DIN 422 TYPE
UNITS	mm		
SHEET SIZE	A4	SERIES	DS1093−05 SERIES

晨翔电子有限公司
CONNFLY ELECTRONIC CO. LTD