Lift | Spacing 5.0 mm

AK700/..-5.0-V-GREEN

Technical Data

Wire sizes	
Solid min	0.2 mm²
Solid max	4.0 mm²
Stranded (flexible) min	0.2mm²
Stranded (flexible) max	2.5 mm²
Stranded with Ferrule min	0.25 mm²
Stranded with Ferrule max	2.5 mm²
Dimensions	
Stripped Length	8.0 mm
PCB Hole Diameter	1.3 mm
Materials	
Clamp	Brass
Screw	Steel
Solder Tab	Copper Alloy

Insulating Material	
Material	PA 6.6
Flammability Class	UL 94 V-0
Temperatures	
Operating Temperature	-30 °C - 105 °C
Store Temperature	-40 °C - 105 °C
Wave Soldering Process	
Soldering Temperature, recommended	265 °C
Peak Soldering Time, recommended	3-4 s
Reflow Process	
Soldering Temperature, recommended	-
Peak Soldering Time, recommended	-

Colours

- GREEN, RAL 6018
- GREY, RAL 7016
- PEBBLE GREY, RAL 7032
- BLUE, RAL 5015
- LIGHT GREEN, similar RAL 6018

Colours according to RAL, there may be variations on colour due to production conditions. Special colours on request.

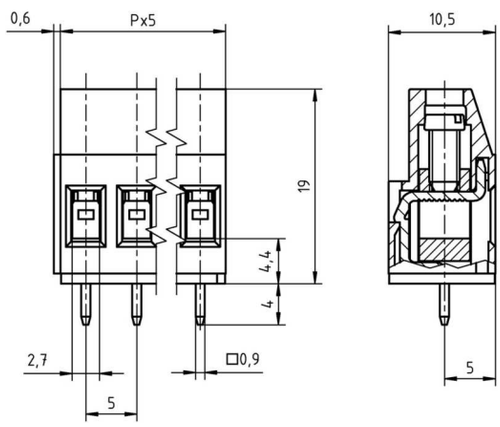

Order Data (Spacing 5.0 mm)

Poles	Width (mm)	Article Designation	Article Number	PU
2	10.60	AK700/2-5.0-V-GREEN	50700020201 F	200
3	15.60	AK700/3-5.0-V-GREEN	50700030201 F	200
4	20.60	AK700/4-5.0-V-GREEN	50700040201 F	200
5	25.60	AK700/5-5.0-V-GREEN	50700050201 F	200
6	30.60	AK700/6-5.0-V-GREEN	50700060201 E	100
7	35.60	AK700/7-5.0-V-GREEN	50700070201 E	100
8	40.60	AK700/8-5.0-V-GREEN	50700080201 E	100
9	45.60	AK700/9-5.0-V-GREEN	50700090201 E	100
10	50.60	AK700/10-5.0-V-GREEN	50700100201 D	50
11	55.60	AK700/11-5.0-V-GREEN	50700110201 D	50
12	60.60	AK700/12-5.0-V-GREEN	50700120201 D	50

Accessoires

Figure	Designation	Article Number
	Bridge, 2-pole, insulated, BRI/2-5.0/5.08-LIGHT GREY	Art.-Nr. 50000000006
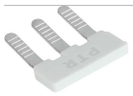	Bridge, 3-pole, insulated, BRI/3-5.0/5.08-LIGHT GREY	Art.-Nr. 50000000007
	Bridge, 2-pole, BR/2-5.0/5.08-L7.0	Art.-Nr. 50000000008
	Screw Cover SC-AK700-YELLOW	Art.-Nr. 50700000004

See pages 282 ff for detail and general accessories and see pages 12/13 concerning services.

Ratings

		c UL us		VDE	
UseGroup		B	C	D	
Rated Voltage		300 V	-	300 V	250 V
Rated Current		20 A	-	10 A	24 A
Rated Wire Size				min	max
	- solid	AWG 30-12	-	AWG 30-12	0.5 mm² 4.0 mm²
	-stranded	AWG 30-12	-	AWG 30-12	0.5 mm² 2.5 mm²
Torque		0.45 Nm	-	0.45 Nm	0.50 Nm
Screw Size		M3	-	M3	M3
Test Voltage		1.60 kV	-	1.60 kV	2.0 kV

PTR Messtechnik GmbH • Gewerbehof 38 • 59368 Werne / Germany
Telefon: +49 (0)2389/7988-0 • Fax: +49 (0)2389/798888 • E-Mail: info@ptr.eu