THIS DRAWING IS UNPUBLISHED. RELEASED FOR PUBLICATION .1997
© COPYRIGHT 1997 BY TYCO ELECTRONICS CORPORATION. ALL RIGHTS RESERVED.

LOC	DIST
A1	

REVISIONS

P	LTR	DESCRIPTION	DATE	DWN	APVD
	A7	Released as per ECR-07-030425	17.12.07	SP	TS

PN 0-2 & 2-2

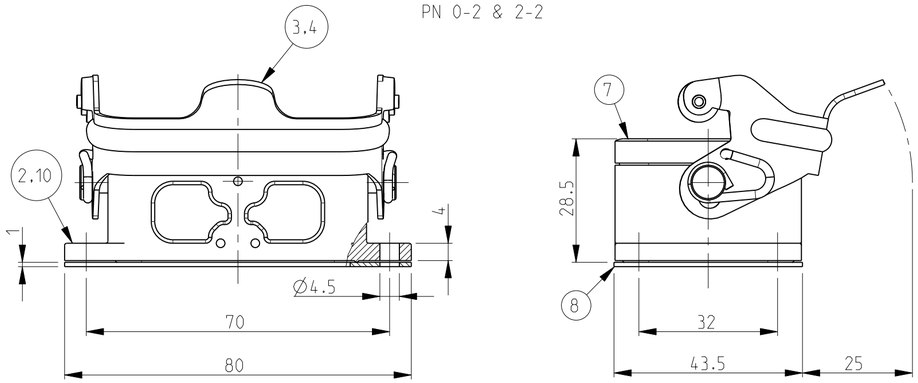

PN 1-2,0-1,0-3,
0-4 & 0-5

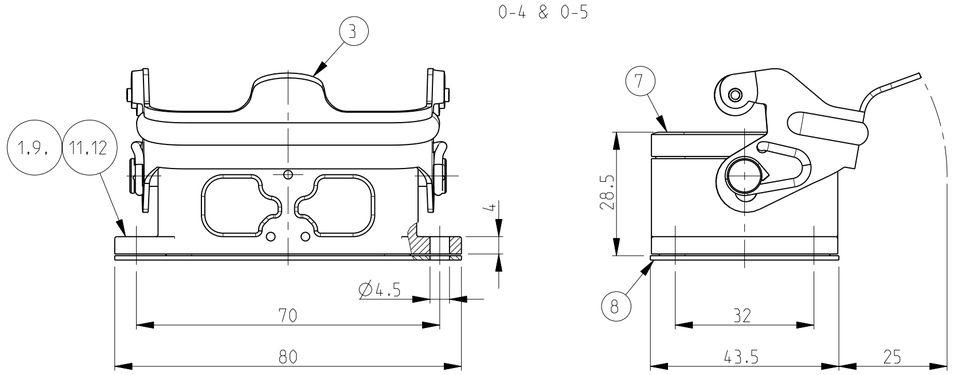

PN 1-8 & 2-8

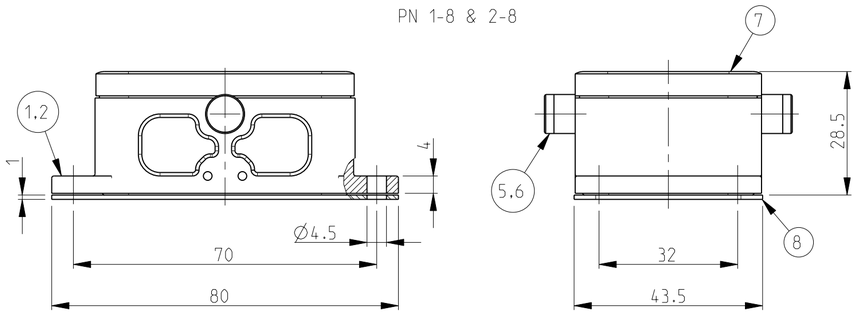

Panel cut-out

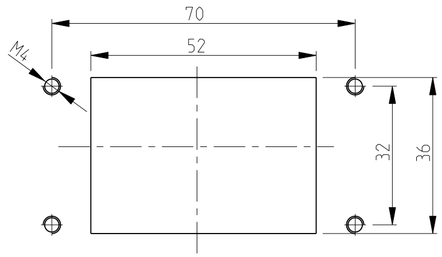

NOTES.

1 Material:Housing:Aluminium Diecasting Alloy
Seals: Neoprene

2 Surface-Varnish Grey
-Aluminium Oxide +
Varnish Black

3 Varnish on the inside not necessary

4 Packaging
Quantity 5 Pieces in a box

PN 0-2 & 2-2	PN 1-2,0-1,0-3, 0-4 & 0-5	PN 1-8 & 2-8
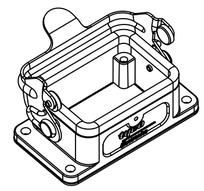	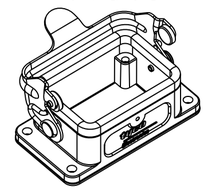	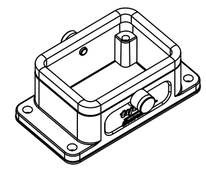
SCALE 1:2	SCALE 1:2	SCALE 1:2

OBSOLETE

0-5	0-4	0-3	0-2	0-1	6-2	2-8	1-8	2-2	1-2	DESCRIPTION	MATERIAL	SURFACE	COLOR	ITEM NO	NOTES
1										Surface mounted housing bottom entry HB	Aluminium		White RAL 9010	12	Without logo
	1	1								Surface mounted housing bottom entry HB	Aluminium		Grey	11	Without logo
			1							Surface mounted housing bottom entry HB	Aluminium		Without varnish	10	
				1						Surface mounted housing bottom entry HB	Aluminium		Borning ried	9	
1	1	1	1	1	1	1	1	1	1	Flange seal	Neoprene		Black	8	
1	1	1	1	1	1	1	1	1	1	Profile seal	Neoprene		Black	7	
						2				ZB-Clip bolt	Stainless steel			6	
							2			ZB-Clip bolt	Steel	Zinc plated	Blue	5	
					1			1		LB-Side clip	Stainless steel			4	
1	1	1	1	1					1	LB-Side clip	Steel	Zinc plated	Blue	3	
						1		1		Surface mounted housing bottom entry HB-K	Aluminium	Aluminium oxide	Black	2	
					1		1		1	Surface mounted housing bottom entry HB	Aluminium		Grey	1	

ORDERING TEXT

2-2	HB.6.AG-LB
2-8	HB-K.6.AG-LB
1-8	HB-Z.6.AG-ZVGR
1-2	HB-K/Z.6.AG-ZVGR
6-2	~~HB.6.AG-LB~~
0-1	HB.6.AG-LB
0-2	HB.6.AG-LB
0-3	HB.6.AG-LB
0-4	HB.6.AG-LB.KM
0-5	HB.6.AG-LB

THIS DRAWING IS A CONTROLLED DOCUMENT FOR TYCO ELECTRONICS CORPORATION IT IS SUBJECT TO CHANGE AND THE CONTROLLING ENGINEERING ORGANIZATION SHOULD BE CONTACTED FOR THE LATEST REVISION.

DIMENSIONS: mm

TOLERANCES UNLESS OTHERWISE SPECIFIED: n.ISO 8015: n.ISO 2768-mH-E: n.DIN 16901-120
0 PLC ±
1 PLC ±
2 PLC ±
3 PLC ±
4 PLC ±
ANGLES ±

MATERIAL
FINISH

DWN Schweiger 23.07.1997
CHK Kramer 26.06.1998
APVD
PRODUCT SPEC 108-74001/74003
APPLICATION SPEC 114-74004/74005
WEIGHT -

Tyco Electronics
Tyco Electronics.AMP.GmbH
D-53819.Neunkirchen.Germany

NAME Surface mounted housing bottom entry HB6

SIZE	CAGE CODE	DRAWING NO	RESTRICTED TO
A2	00779	C-1102244	-

CUSTOMER DRAWING
SCALE 1:1 SHEET 1 OF 1 REV A7

AMP 1471-9 REV 31MAR2000

Pro/ENGINEER DRAWING